CRN, CRNE high pressure

50/60 Hz IEC

Vertical, multistage centrifugal pumps

GRUNDFOS

Table of contents

1. Introduction

This data booklet deals with CRN, CRNE pumps for high-pressure applications.

A high pressure can be achieved in two ways:

- One pump with a frequency-controlled high-speed motor:
  - CRNE-HS, pump sizes 1 and 3.
- A feed pump and a high-pressure pump connected in series:
  - CRN-SF, pump sizes 3 to 64.

The high-pressure pump is available in two designs, depending on the pump size.

- CRNE-HS and CRN-SF: The chamber stack is upside-down compared to a CRN standard pump.
- CR, CRN: A standard pump with or without a bearing flange.

The pumps described in this data booklet are a CR and CRN standard pump used as a feed pump connected in series with a larger pump, the high-pressure pump.

For use of other CR, CRN pumps as high-pressure pumps, see the data booklet on custom-built CR pumps in Grundfos Product Center at www.grundfos.com.

The pressure generated by the high-pressure pump makes special demands on the design. This data booklet primarily describes the following aspects where the high-pressure pump differs from the standard pump:

- Design
- operating conditions
- performance curves
- dimensions.

The performance curves and dimensional sketches for the CRN SF pump range show the high-pressure pump connected in series with a standard pump with various numbers of stages.

Grundfos E-motors

We also offer frequency-controlled CRE pumps which are the ideal choice for a number of applications characterized by a demand for a variable flow rate at a constant pressure. These pumps are suited for water supply systems and pressure boosting as well as for industrial applications. Depending on the application, the pumps offer energy savings, increased comfort and improved processing.

See the CRE, CRIE, CRNE data booklet available in Grundfos Product Center at http://product-selection.grundfos.com/.

2. Performance range

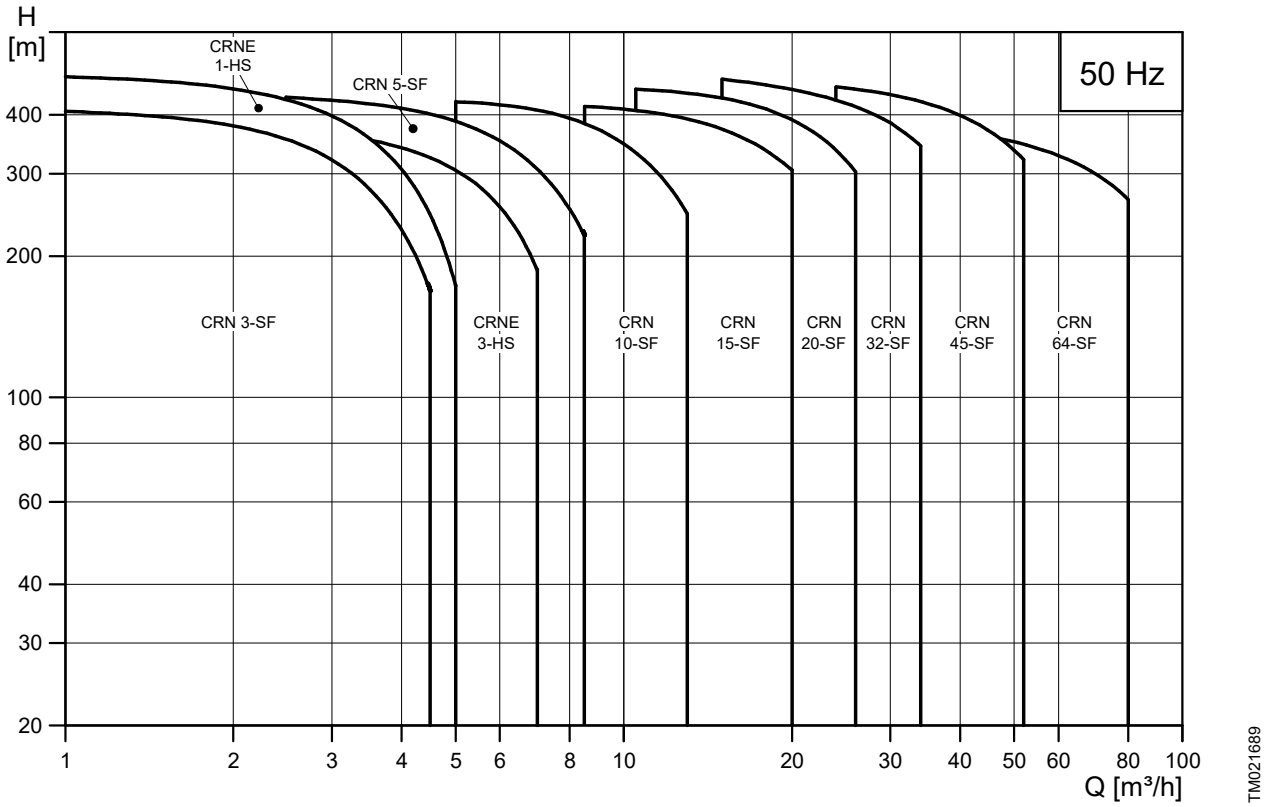

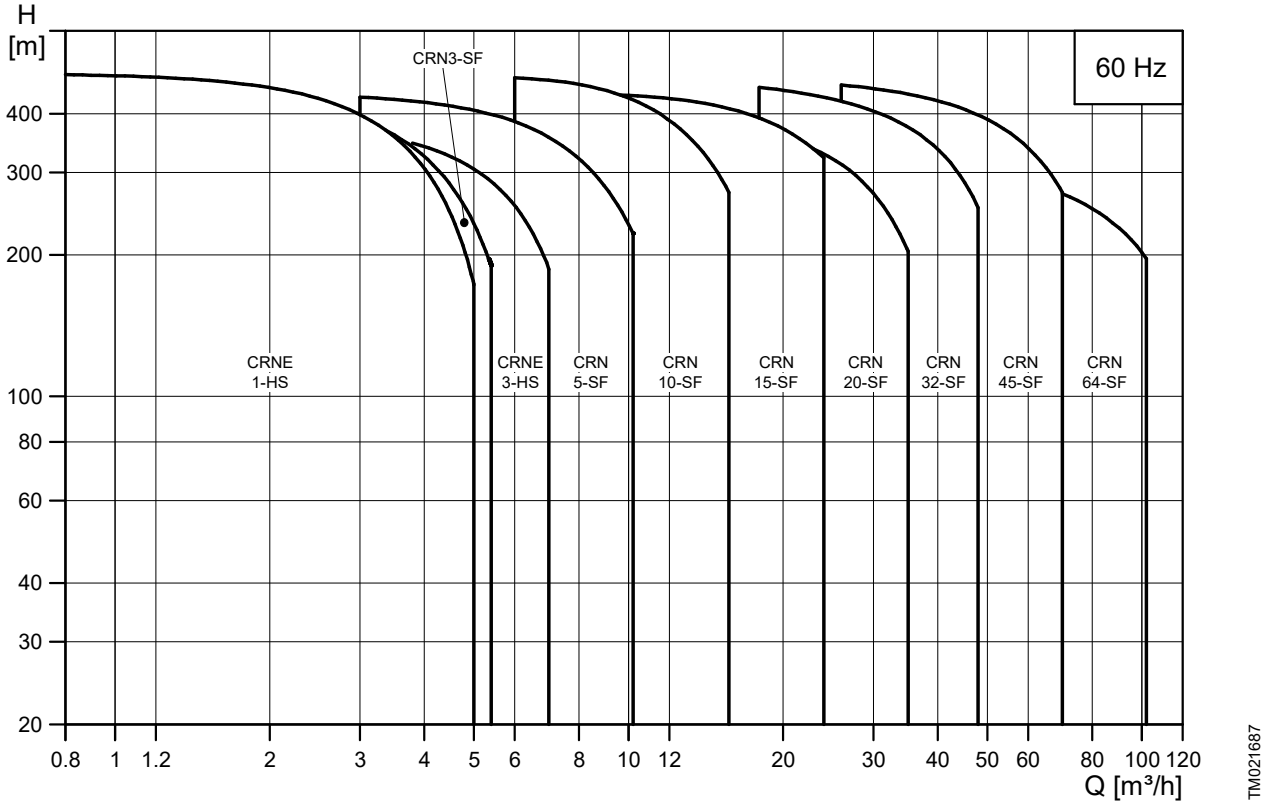

ErP compliant

The product is energy-optimized and complies with the ecodesign requirements for water pumps specified in the ErP Directive (Commission Regulation (EC) No 547/2012), which became effective on 1 January 2013. As from this date, all pumps are classified and graduated in the Minimum Efficiency Index (MEI).

Minimum efficiency index

Minimum efficiency index (MEI) means the dimensionless scale unit for hydraulic pump efficiency at best efficiency point (BEP), part load (PL) and overload (OL). The Commission Regulation (EU) sets efficiency requirements to MEI ≥ 0.10 as from 1 January 2013 and MEI ≥ 0.40 as from 1 January 2015. An indicative benchmark for best-performing water pump available on the market as from 1 January 2013 is determined in the Commission Regulation.

- The benchmark for most efficient water pumps is MEI ≥ 0.70.
- The efficiency of a pump with a trimmed impeller is usually lower than that of a pump with the full impeller diameter. The trimming of the impeller will adapt the pump to a fixed duty point, leading to reduced energy consumption. The minimum efficiency index (MEI) is based on the full impeller diameter.
- The operation of this water pump with variable duty points may be more efficient and economic when controlled, for example, by the use of a variable-speed drive that matches the pump duty to the system.
- Information on benchmark efficiency is available at http://europump.eu/efficiencycharts.

MEI values for CR high-pressure pumps

Pump type	MEI
CR 1	> 0.70
CR 3	> 0.70
CR 5	0.57
CR 10	> 0.70
CR 15	> 0.70
CR 20	> 0.70
CR 32	> 0.70
CR 45	> 0.70
CR 64	> 0.70

3. Product range

CRNE-HS and CRN-SF

Pump size	CRNE 1 HS	CRNE 3 HS	CRN 3 SF	CRN 5 SF	CRN 10 SF	CRN 15 SF	CRN 20 SF	CRN 32 SF	CRN 45 SF	CRN 64 SF
Rated flow rate, 50 Hz [m^3/h]	1	3	3	5	10	15	20	32	45	64
Rated flow rate, 60 Hz [m^3/h]	1.2	3.6	3.6	6	12	18	24	38	54	77
Flow range, 50 Hz [m^3/h]	0.8 - 5	1-7	1.2 - 4.5	2.5 - 8.5	5-13	9-24	11-29	15-40	22-58	30-85
Flow range, 60 Hz [m^3/h]	0.8 - 5	1-7	1.4 - 5.4	3 - 10.2	6-16	10-29	13-35	18-48	26-70	36-102
Minimum liquid temperature [°C] [1)]	-20	-20	-20	-20	-20	-20	-20	-30	-30	-30
Maximum liquid temperature [°C] [1)]	120	120	120	120	120	120	120	120	120	120
Maximum pressure, 50 Hz [bar]	47	41	44	47	44	47	48	50	49	41
Maximum pressure, 60 Hz [bar]	48	42	48	48	47	47	47	49	49	34
Motor power [kW]	4.0 - 7.5	4.0 - 7.5	0.37 - 4.0	0.55 - 5.5	0.75 - 7.5	3-15	4 - 18.5	11-30	11-45	11-45
Version										
CRN, CRNE: Stainless steel EN/DIN 1.4401/AISI 316	●	●	●	●	●	●	●	●	●	●
Pipe connection										
Flange (DIN flange)	DN 25/32	DN 25/32	DN 25/32	DN 25/32	DN 50	DN 50	DN 50	-	-	-
PJE, Victaulic coupling (P)	●	●	●	●	●	●	●	●	●	●
Tri-Clamp (CX)	DN 32	DN 32	DN 32	DN 32	DN 50	DN 50	DN 50	-	-	-
System										
One pump with high-speed motor	●	●	●	-	-	-	-	-	-	-
Two pumps connected in series	-	-	-	●	●	●	●	●	●	●

1) CRN 32-64: Liquid temperature -40 to +180 °C (oils up to +240 °C) is available on request.

● Available.

- Not available.

4. Applications

The CRN high-pressure series is a multi-purpose pump range suitable for a large variety of applications demanding a reliable and cost-efficient supply.

The CRN pumps handle a variety of liquids from potable water to industrial liquids within a very wide temperature range, flow rate and pressure scale.

Industry

The lists below show some general examples of applications requiring a high pressure.

Pressure boosting

- Process water systems
- washing and cleaning systems
- high-pressure washdown systems
- boiler feed and condensate systems.

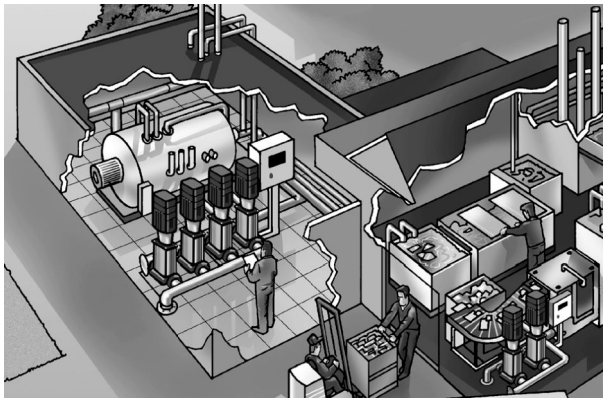

TM021208

Industrial application

Water treatment

- Ultra-filtration systems
- reverse osmosis systems.

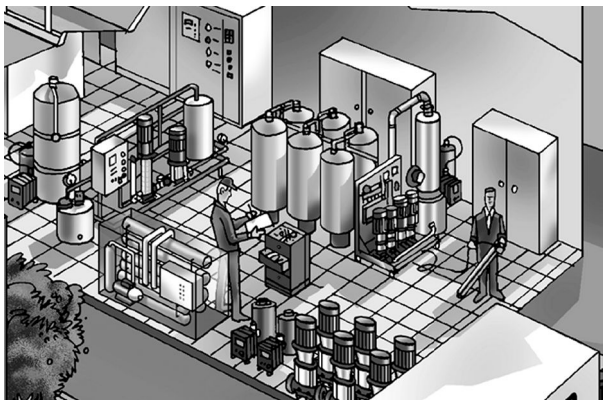

TM021209

Process water treatment

CRNE 1 and 3 HS

TM083443

CRNE 3 HS pump

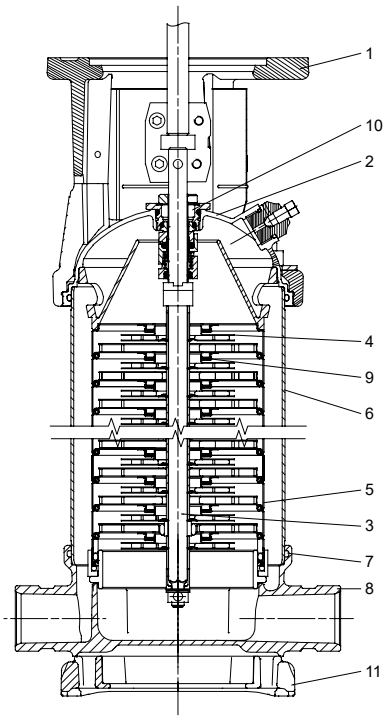

TM021688

Sectional drawing of CRNE 1 and 3 HS

Pump

CRNE-HS is a single-pump solution capable of generating up to 50 bar.

The CRNE-HS pump is a non-self-priming, vertical, multistage centrifugal pump fitted with a high-speed Grundfos MGE motor with an integrated frequency converter.

The direction of rotation is the opposite of that of standard pumps, and the chamber stack is turned upside-down. Consequently, the pumped liquid flows in the opposite direction.

This special design ensures that the shaft seal is not affected by the pump outlet pressure.

The base, pump head cover and all components in contact with the pumped liquid are made of stainless steel.

The pump has a maintenance-free mechanical cartridge shaft seal.

Operating conditions

Liquid temperature:	-20 to +120 °C
Ambient temperature:	Maximum +50 °C
Minimum inlet pressure:	2 bar
Maximum inlet pressure:	25 bar
Maximum operating pressure:	50 bar

Materials

Pos.	Designation	Material	EN/DIN	AISI/ASTM
1	Pump head	Cast iron EN-GJL-200	EN-JL1030	ASTM 25B
2	Pump head cover	Stainless steel	1.4408	CF8M (equal to AISI 316)
3	Shaft	Stainless steel	1.4401 1.4460	AISI 316 AISI 329
4	Impeller	Stainless steel	1.4401	AISI 316
5	Chamber	Stainless steel	1.4401	AISI 316
6	Sleeve	Stainless steel	1.4401	AISI 316
7	O-ring for sleeve	EPDM, FKM, FFKM, FXM		
8	Base	Stainless steel	1.4408	CF8M (equal to AISI 316)
9	Neck ring	PTFE		
10	Shaft seal	HQQE, HQQV, HQQF, HQQK		
11	Base plate	Stainless steel [2)]	1.4408	CF8M (equal to AISI 316)
	Other rubber parts	EPDM, FKM, FFKM, FXM		

2) Stainless-steel flanges are standard for pumps with DIN flange connection.

Related information

Ambient temperature and installation altitude

CRN 3, 5, 10, 15, 20 SF

GR7767

CRN 10 and CRN 10 SF pump system

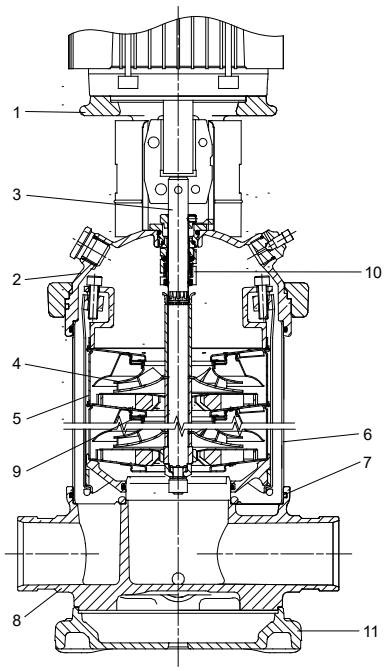

TM027336

Sectional drawing of CRN 3, 5, 10, 15, 20 SF

Pump

CRN-SF is a double-pump system capable of generating up to 50 bar.

The system consists of two pumps connected in series. One pump is a standard pump for feeding. The other pump is a high-pressure pump such as CRN-SF, especially designed for high pressures.

The CRN-SF pump is a non-self-priming, vertical, multistage centrifugal pump fitted with a Grundfos standard motor. The CRN-SF pump is also available with a Grundfos MGE motor with an integrated frequency converter. When the pump is fitted with an MGE motor, the pump designation is CRNE-SF.

The direction of rotation is the opposite of that of standard pumps, and the chamber stack is turned upside-down. Consequently, the pumped liquid flows in the opposite direction.

This special design ensures that the shaft seal is not affected by the pump outlet pressure.

The base, pump head cover and vital pump components are made of stainless steel. The base has in-line inlet and outlet ports.

The pump has a maintenance-free mechanical cartridge shaft seal.

Operating conditions

Liquid temperature:	-40 to +120 °C
Ambient temperature:	See the section on ambient temperature.
Minimum inlet pressure:	2 bar
Maximum inlet pressure:	25 bar
Maximum operating pressure:	50 bar

Materials

Pos.	Designation	Material	EN/DIN	AISI/ASTM
1	Pump head	Cast iron	EN-GJS-450 -10	
2	Pump head cover	Stainless steel	1.4408	CF8M (equal to AISI 316)
3	Shaft	Stainless steel	1.4460	AISI 329
4	Impeller	Stainless steel	1.4401	AISI 316
5	Chamber	Stainless steel	1.4401	AISI 316
6	Sleeve	Stainless steel	1.4401	AISI 316
7	O-ring for sleeve	EPDM, FKM, FFKM, FXM	1.0037	
8	Base	Stainless steel	1.4408	CF8M (equal to AISI 316)
9	Neck ring	PTFE		
10	Shaft seal	HQQE, HQQV, HQQF, HQQK		
11	Base plate	Stainless steel [3]	1.4408	25BCF8M (equal to AISI 316)
	Other rubber parts	EPDM, FKM, FFKM, FXM		

[3] Stainless steel available on request.

Related information

Ambient temperature and installation altitude

CRN 32, 45, 64 SF

TM055135

CRN 45 and CRN 45 SF pump system

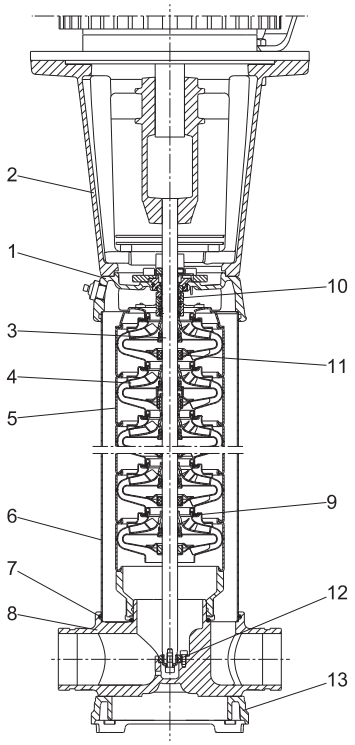

TM055408

Sectional drawing of CRN 32, 45, 64 SF

Pump

CRN-SF is a double-pump system capable of generating up to 50 bar.

The system consists of two pumps connected in series. One pump is a standard pump for feeding, such as CRN. The other pump is a high-pressure pump such as CRN-SF, especially designed for high pressures, such as CRN-SF. The CRN-SF pump is a non-self-priming, vertical, multistage centrifugal pump fitted with a Grundfos standard motor.

The direction of rotation is the opposite of that of standard pumps, and the chamber stack is turned upside-down. Consequently, the pumped liquid flows in the opposite direction.

This special design ensures that the shaft seal is not affected by the pump outlet pressure.

The base, pump head cover and vital pump components are made of stainless steel.

The pump has a maintenance-free mechanical cartridge shaft seal.

Operating conditions

Liquid temperature:	-40 to +120 °C
Ambient temperature:	See the section on ambient temperature.
Minimum inlet pressure:	2 bar
Maximum inlet pressure:	25 bar
Maximum operating pressure:	50 bar

Materials

Pos.	Designation	Material	EN/DIN	AISI/ ASTM
1	Pump head	Stainless steel	1.4408	CF8M (equal to AISI 316)
2	Motor stool	Cast iron	EN-GJL-200 [4] EN-GJS-450-10 [5]	
3	Shaft	Stainless steel	1.4460	
4	Impeller	Stainless steel	1.4401	AISI 316
5	Chamber	Stainless steel	1.4401	AISI 316
6	Sleeve	Stainless steel	1.4401	AISI 316
7	O-ring for sleeve	EPDM, FKM, FFKM, FXM	1.0037	
8	Base	Stainless steel	1.4408	CF8M (equal to AISI 316)
9	Neck ring	Carbon-graphite-filled PTFE		
10	Shaft seal	HQQE, HQQV, HQQF, HQQK		
11	Bearing ring	Bronze/carbon-graphite-filled PTFE		
12	Bottom bearing ring	TC/TC [6]		
13	Base plate	Stainless steel	1.4408	
	Other rubber parts	EPDM, FKM		

4) 30 and 37 kW motor.

5) 45 kW motor.

6) TC = tungsten carbide (cemented).

Related information

Ambient temperature and installation altitude

Type keys

CRNE 1 and 3 HS

Example
CRNE 3-23 Q-P-G-E-HQQE

Code	Explanation
CRNE	Type range: CRNE
3	Flow rate [m^3/h]
23	Number of impellers
Q	Code for pump version
P	Code for pipe connection
G	Code for materials
E	Code for rubber parts
	Code for shaft seal:
H	Shaft seal type designation
Q	Seal face material (rotating seal face)
Q	Seal face material (stationary seal face)
E	Secondary seal material (rubber parts)

CRN 3, 5, 10, 15 and 20 SF

Example
CRN 5-34 S-P-G-E-HQQE

Code	Explanation
CRN	Type range: CRN
5	Flow rate [m^3/h]
34	Number of impellers
S	Code for pump version
P	Code for pipe connection
G	Code for materials
E	Code for rubber parts
	Code for shaft seal:
H	Shaft seal type designation
Q	Seal face material (rotating seal face)
Q	Seal face material (stationary seal face)
E	Secondary seal material (rubber parts)

CRN 32, 45 and 64

Example
CRN 32-2-1 A-F-G-E-HQQE

Code	Explanation
CRN	Type range: CR, CRN
32	Flow rate [m^3/h]
2	Number of stages
1	Number of reduced-diameter impellers, if any
A	Code for pump version
F	Code for pipe connection
G	Code for materials
E	Code for rubber parts
	Code for shaft seal:
H	Shaft seal type designation
Q	Seal face material (rotating seal face)
Q	Seal face material (stationary seal face)
E	Secondary seal material (rubber parts)

Key to codes

Code	Description
Pump version	
A	Basic version
B	Oversize motor
C	CR compact
D	Pump with pressure intensifier
E	Pump with certificate
F	Pump for high temperatures (with air-cooled top)
G	E-pump without operating panel
H	Horizontal version
I	Different pressure rating
J	E-pump with a different maximum speed
K	Pump with low NPSH
L	Pump including Grundfos CUE and certificate
M	Magnetic drive
N	With sensor
O	Cleaned and dried
P	Undersize motor
Q	High-pressure pump with high-speed MGE motor
R	Belt-driven pump
S	High-pressure pump
T	Thrust-handling device
U	ATEX-approved pump
V	Cascade function
W	Deep-well pump with ejector
X	Special version
Y	Electropolished
Z	Pumps with bearing flange
Pipe connection	
A	Oval flange
B	NPT thread
CA	FlexiClamp
CX	TriClamp
F	DIN flange
FC	DIN 11853-2 flange (collar flange)
FE	EN 1092-1, type E
G	ANSI flange
J	JIS flange
N	Changed diameter of ports
P	PJE coupling (Victaulic type)
X	Special version
Materials	
A	Basic version
C	Carbon-free pump
D	Carbon-graphite-filled PTFE (bearings)/tungsten carbide
E	Pickled and passivated (Only Japan)
H	Flanges and base plate EN 1.4408
K	Bronze (bearings)/tungsten carbide
L	Motor stool, base plate and flanges EN 1.4408
M	Motor stool, base plate, coupling and flanges EN 1.4408 and coupling guards in cobber. Bolts, nuts and spacing pipes EN 1.4401 or higher grade
N	Flanges EN 1.4408
P	PEEK neck ring
Q	Silicon carbide/silicon carbide bearing in pump and silicon carbide/silicon carbide seal faces in thrust-handling device
R	Silicon carbide/silicon carbide bearing
S	PTFE neck rings
T	Base plate EN 1.4408
U	Silicon carbide/silicon carbide bearing in pump and silicon carbide/tungsten carbide seal faces in thrust-handling device
W	Tungsten carbide/tungsten carbide
X	Special version
Rubber parts in pump	
E	EPDM
F	FXM (Fluoraz®)
K	FFKM (Kalrez®)
N	CR (Neoprene)
V	FKM (Viton®)
Shaft seal type designation	
A	O-ring seal with fixed driver
H	Balanced cartridge seal with O-ring
O	Double seal, back-to-back
P	Double seal, tandem
X	Special version
Seal face material (rotating and stationary seal face)	
B	Carbon, synthetic resin-impregnated
U	Cemented tungsten carbide
Q	Silicon carbide
X	Other ceramics
Secondary seal material (rubber parts)	
E	EPDM
F	FXM (Fluoraz®)
K	FFKM (Kalrez®)
V	FKM (Viton®)

Operating range of shaft seal for high-pressure pump

The actual operating range of the shaft seal for the high-pressure pump depends on the operating pressure, type of shaft seal and liquid temperature.

The following temperature ranges apply to clean water.

Standard shaft seal	Motor size [kW]	Description	Temperature range [°C]
HQQE	0.37 - 45	O-ring, cartridge, balanced seal, SiC/SiC, EPDM	-40 to +120
HBQE [7)]	55-75	O-ring, cartridge, balanced seal, carbon/ SiC, EPDM	0 to +120
HQQV	0.37 - 45	O-ring, cartridge, balanced seal, SiC/SiC, FKM	-20 to +90
HBQV [7)]	55-75	O-ring, cartridge, balanced seal, carbon/ SiC, FKM	0 to +90

7) Available as HQQE and HQQV on request.

Motor protection

Grundfos MG and Siemens motors

Single-phase Grundfos motors have a built-in thermal overload switch (IEC 34-11, TP 211).

Three-phase Grundfos motors from 3 to 22 kW have a built-in thermistor (PTC) according to DIN 44082 (IEC 34-11, TP 211).

Three-phase motors must be connected to a motor-protective circuit breaker according to local regulations.

Grundfos MGE motors

The MGE motor incorporates thermal protection against slow overloading and blocking (IEC 34 11, TP 211).

CRNE pumps require no external motor protection.

Terminal box positions

As standard, the terminal box is fitted on the inlet side of the pump.

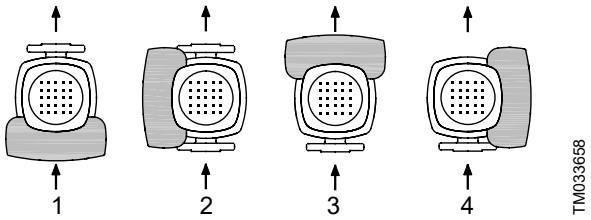

Terminal box positions

Pos.	Description
1	6 o'clock position (standard)
2	9 o'clock position
3	12 o'clock position
4	3 o'clock position

Ambient temperature and installation altitude

The ambient temperature and the installation altitude are important factors for the motor life, as they affect the life of the bearings and the insulation system.

The installation altitude is the height of the installation site above sea level.

Pumps with a Grundfos MG or Siemens motor

Motor power [kW]	Motor make	Motor efficiency class	Maximum ambient temperature [°C]	Maximum altitude above sea level [m]
0.37 - 0.55	Grundfos MG	-	+40	1000
0.75 - 22	Grundfos MG	IE3	+60	3500
30-45	Siemens	IE3	+55	2750

Motors installed at maximum ambient temperature and altitude can be loaded 100 %.

If the ambient temperature or the installation altitude exceeds the recommended maximum ambient temperature or altitude, the motor must not be fully loaded due to the low density and consequently low cooling effect of the air. In such cases, use the below diagram to calculate the derated motor power:

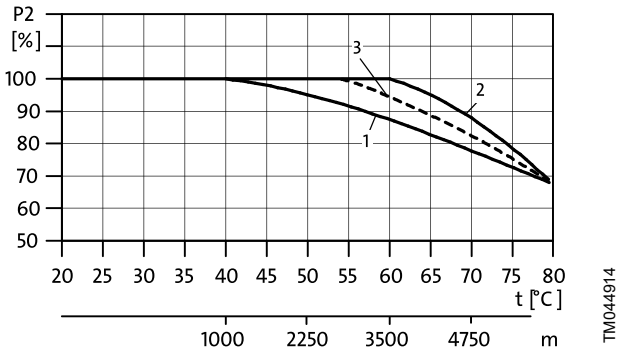

Maximum motor output in relation to ambient temperature and altitude

Motor power [P2] [kW]	Motor make	Derating curve
0.37 - 0.55	MG	curve 1
0.75 - 22	MG	curve 2
30-45	Siemens	curve 3

If both the maximum temperature and altitude are exceeded, the total derating factor is calculated by multiplying the temperature and altitude derating factors. If the required power output to operate the pump exceeds the derated motor power, select an oversized motor. Contact Grundfos for further information.

Pumps with a Grundfos MGE motor

Motor power [kW]	Motor make	Motor efficiency class	Maximum ambient temperature [°C]	Maximum altitude above sea level [m]
0.37 - 11	Grundfos MGE	IE5	+50	1000
15-22	Grundfos MGE	IE3	+40	1000

Motors installed at maximum ambient temperature and altitude can be loaded 100 %.

Continuous operation at higher temperatures reduces the expected product life. If the motor is to operate at ambient temperatures between 50 and 60 °C, select an oversize motor.

If the maximum installation altitude is exceeded, the motor must not be fully loaded due to the low density and consequently low cooling effect of the air. In such cases, use the below diagram to calculate the derated motor power:

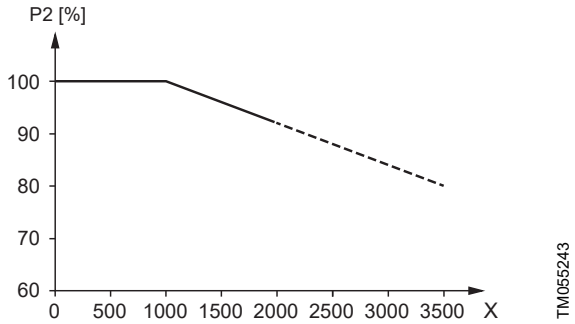

Motor output power in relation to altitude

Pos.	Description
X	Altitude [m]

In order to maintain the galvanic isolation and ensure correct clearance according to EN 60664-1:2007, the supply voltage must be adapted to the altitude:

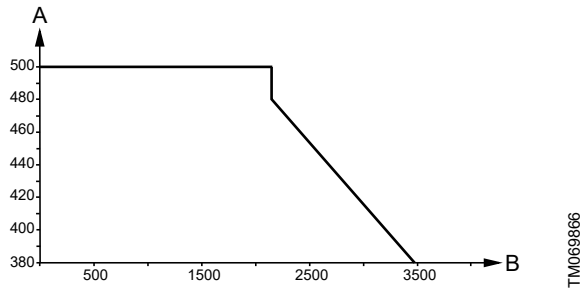

Supply voltage for three-phase motor in relation to altitude

Pos.	Description
A	Supply voltage [V]
B	Altitude [m]

Pumps with an MGE motor can be installed up to 3500 m above sea level.

Pumped liquids

The pumps are suitable for thin, clean, non-flammable liquids, not containing solid particles or fibres that may attack the pump mechanically or chemically.

The pumping of liquids with a density or kinematic viscosity higher than that of water will cause a considerable pressure drop, a drop in the hydraulic performance and a rise in the power consumption.

In such situations, the pump must be fitted with a larger motor.

Whether a pump is suitable for a particular liquid depends on a number of factors of which the most important are chloride content, pH value, temperature, and the content of chemicals and oils and similar.

Please note that aggressive liquids, for example, seawater and some acids, may attack or dissolve the protective oxide film of the stainless steel and thus cause corrosion.

If in doubt, contact Grundfos.

5. Selection

Selection of high-pressure pumps

Pump size

Base the selection of the pump size on these parameters:

- required flow and pressure at the duty point
- pressure loss as a result of height differences
- friction loss in the pipes. It may be necessary to account for pressure loss in connection with, for example, long pipes, bends and valves.
- best efficiency at the estimated duty point.

Pump efficiency and duty point

If the pump is expected to always operate in the same duty point, select a pump which is operating in a duty point corresponding to the best efficiency of the pump.

In the case of varying consumption, select a pump with its best efficiency within the duty range representing the highest power consumption, that is typically the duty range covering the greater part of the duty time.

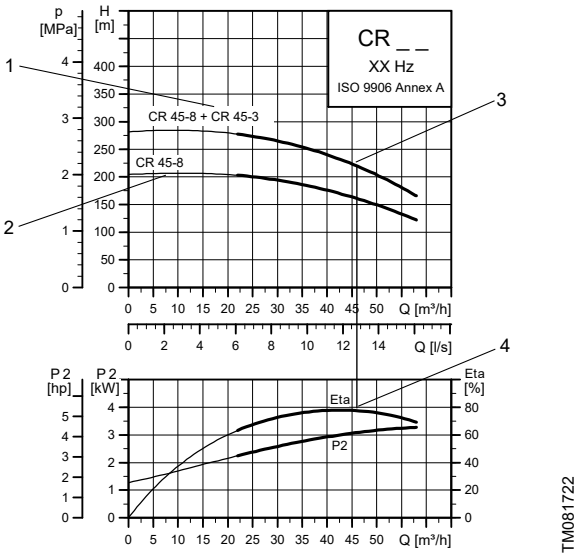

Example of a duty point

Pos.	Description
1	Feed pump
2	High-pressure pump
3	Duty point
4	Best efficiency

Minimum inlet pressure, NPSH

We recommend calculation of the inlet pressure "H" in these situations:

- The liquid temperature is high.
- The flow is significantly higher than the rated flow.
- Water is drawn from depths.
- Water is drawn through long pipes.
- Inlet conditions are poor.

To avoid cavitation, make sure that there is a minimum pressure on the inlet side of the pump. The maximum suction lift "H" in metres head can be calculated as follows:

$H = p_b \times 10.2 - NPSH - H_f - H_v - H_s$

p_b	Barometric pressure in bar. The barometric pressure can be set to 1 bar. In closed systems, p_b indicates the system pressure in bar.
NPSH	Net Positive Suction Head in metres head. To be read from the NPSH curve at the highest flow the pump will be delivering.
H_f	Friction loss in inlet pipe in metres head. At the highest flow the pump will be delivering.
H_v	Vapour pressure in metres head. To be read from the vapour pressure scale. "H_v" depends on the liquid temperature "T_m".
H_s	Safety margin = minimum 0.5 metres head.

If the calculated "H" is positive, the pump can operate at a suction lift of maximum "H" metres head.

If the calculated "H" is negative, an inlet pressure of minimum "H" metres head is required.

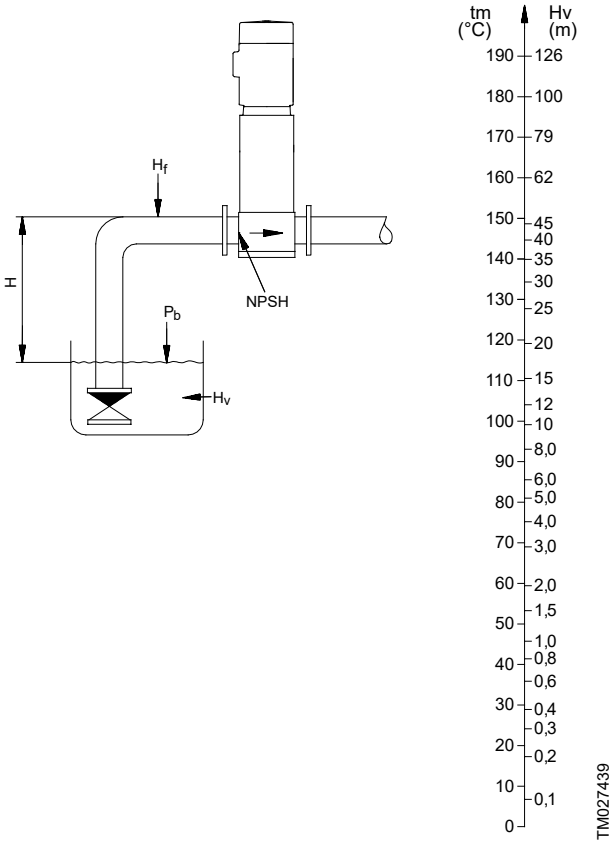

Minimum inlet pressure, NPSH

To avoid cavitation, do not select a pump with a duty point too far to the right on the NPSH curve.

Always check the NPSH value of the pump at the highest possible flow.

Inlet pressure and operating pressure

Do not exceed the limit values for these pressures:

- minimum inlet pressure
- maximum inlet pressure
- maximum operating pressure.

Shaft seal

As standard, the CRN high-pressure range is fitted with an HQQE shaft seal suitable for the most common high-pressure applications.

These key parameters must be taken into account when selecting the shaft seal:

- type of pumped liquid
- liquid temperature.

Grundfos offers a wide range of shaft seal variants to meet specific demands.

For proper lubrication of the shaft seal, be sure to note the operating conditions for the pump.

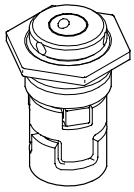

Shaft seal

How to read the curve charts

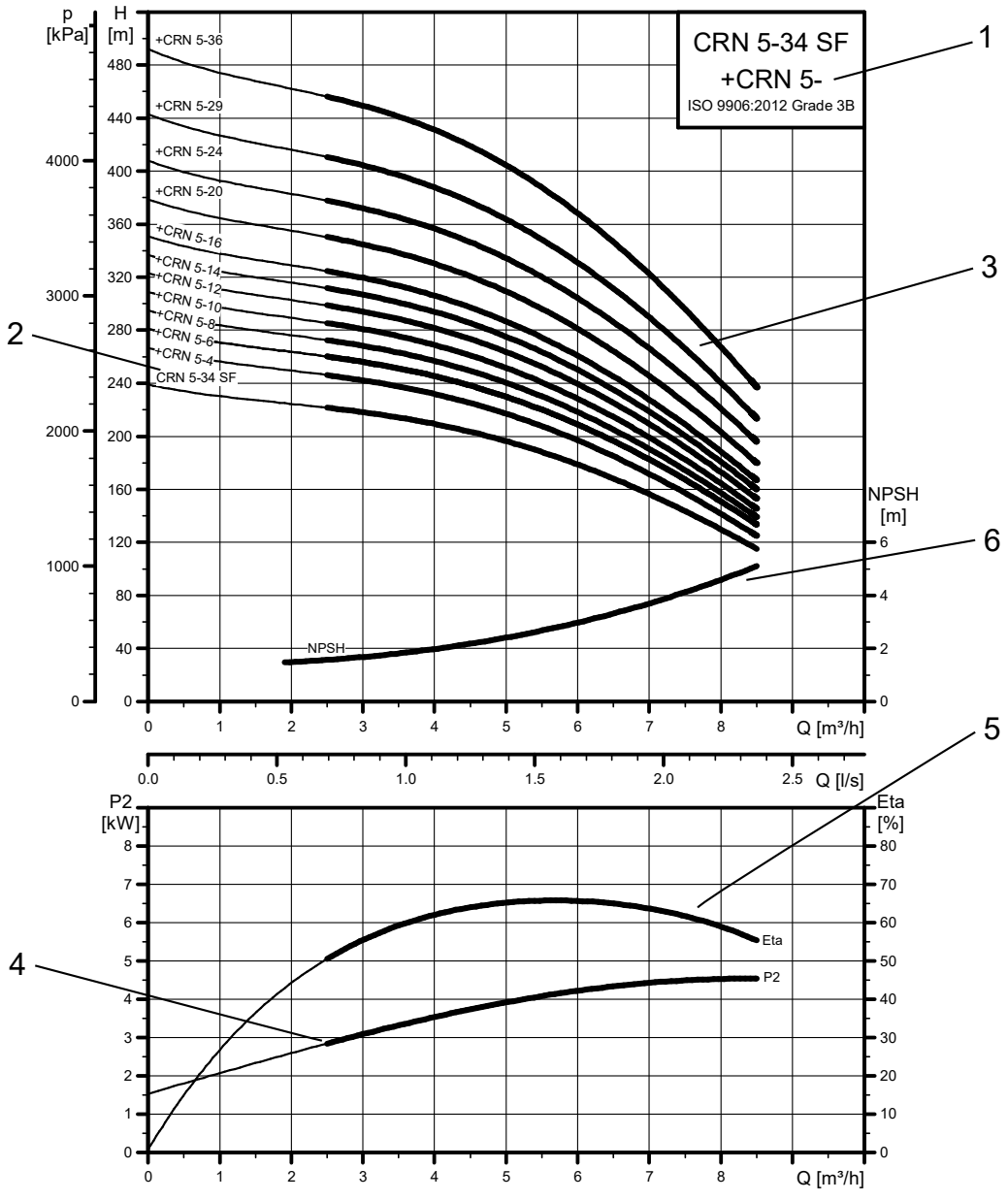

How to read the curve charts

Pos.	Description
1	Pump type (two pumps connected in series: High-pressure pump + feed pump. Example: CRN 5-34 SF + CRN 5). ISO standard
2	First figure: flow rate. Second figure: number of stages. Third figure: number of reduced-diameter impellers.
3	QH curve of the individual pump. The bold curves indicate the recommended duty range for best efficiency.
4	The power curve indicates the pump input power per stage.
5	The eta curve shows the efficiency of a pump with an average number of stages. The efficiency of pumps with reduced-diameter impellers is approximately 2 % lower than the eta curve shown in the chart.
6	The NPSH curve is an average curve for all the variants shown.

Guidelines to performance curves

The guidelines below apply to the performance curves:

- Tolerances to ANSI or ISO standards, such as ISO 9906:2012, Grade 3B, if indicated on the curve chart.
- The motors used for the measurements are standard Grundfos-specified motors.
- Measurements have been made with airless water at a temperature of 20 °C.
- The curves apply to the following kinematic viscosity: υ = 1 mm^2/s (1 cSt).
- Due to the risk of overheating, the pumps must not be used at a flow rate below the minimum flow rate.
- The QH curves apply to a rated motor speed of a three-phase mains-operated motor. For realistic curves, go to Grundfos Product Center (http://product-selection.grundfos.com), and insert data.

The curve below shows the minimum flow rate as a percentage of the rated flow rate in relation to the liquid temperature. The dotted line shows a CR pump fitted with an air-cooled top assembly.

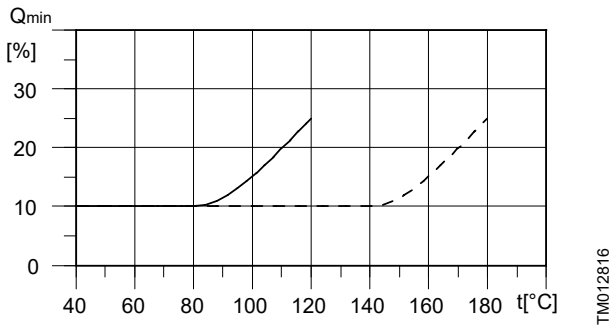

Minimum flow rate

6. Performance curves and technical data

CRNE 1 HS, 50/60 Hz

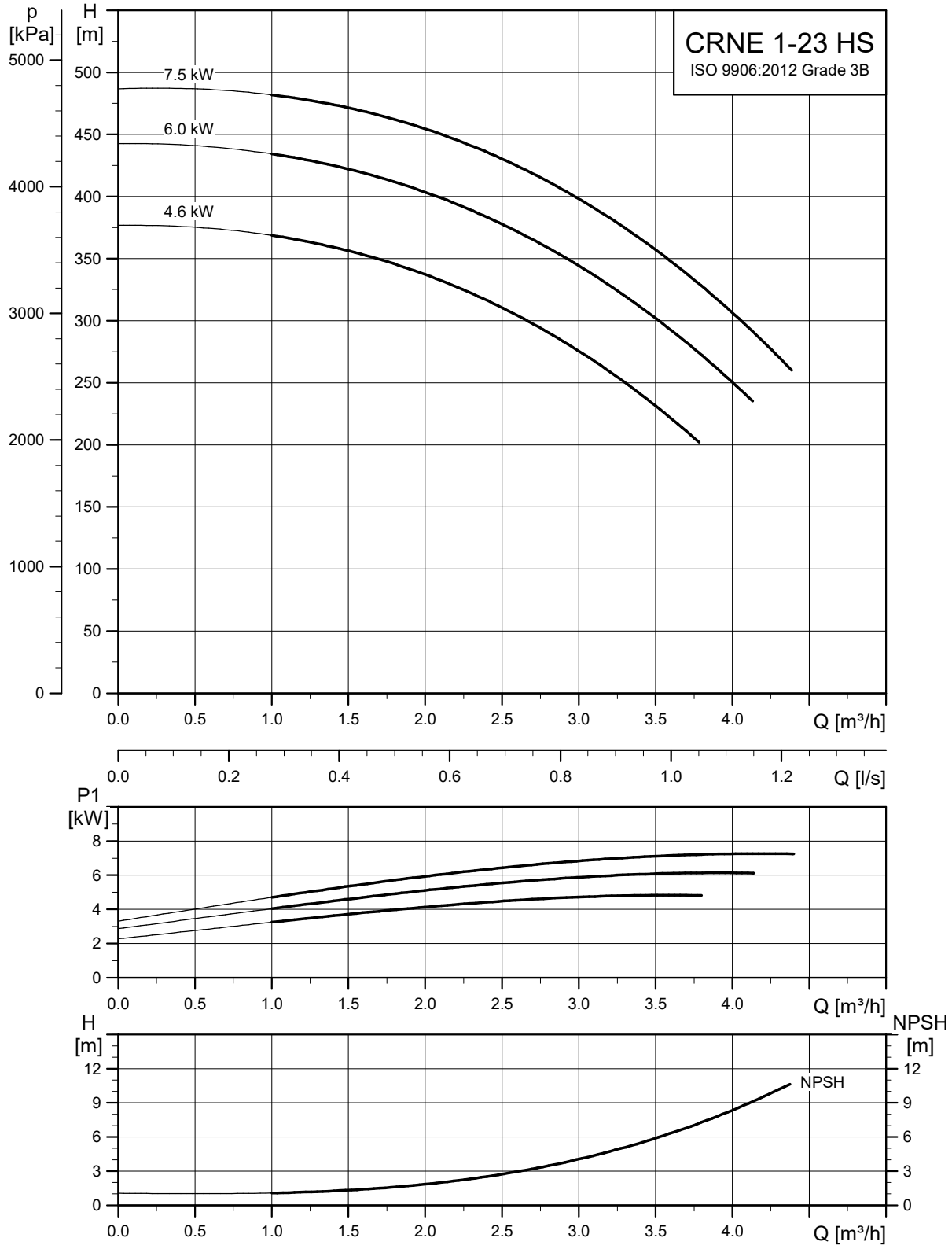

Dimensional sketches

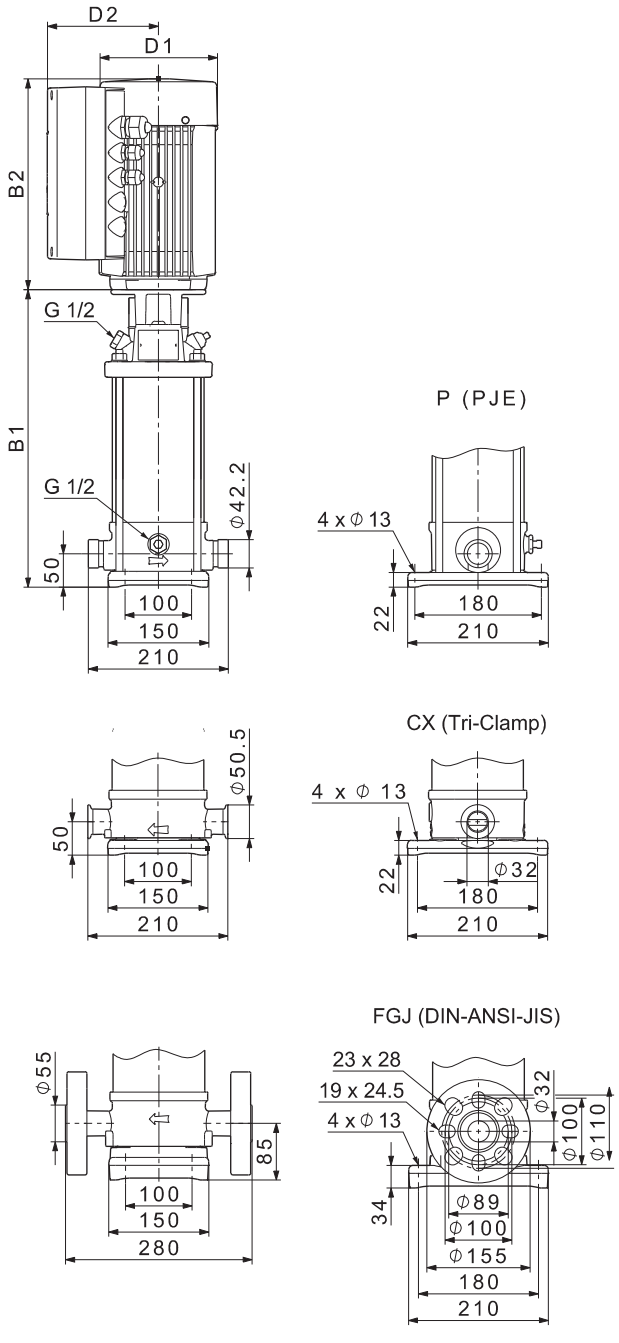

Dimensions and weights

Pump type	Motor P_2 [kW]	Dimensions [mm]							Net weight [kg]	
		PJE/CX		DIN flange		D1	D2	D3	PJE/CX	DIN flange
		B1	B1+B2	B1	B1+B2					
CRNE 1-23 HS	4.6	680	1014	715	1049	191	201	160	50	57
CRNE 1-23 HS	6	680	1014	715	1049	191	201	160	53	61
CRNE 1-23 HS	7.5	680	1068	715	1103	255	237	160	74	82

CRNE 3 HS, 50/60 Hz

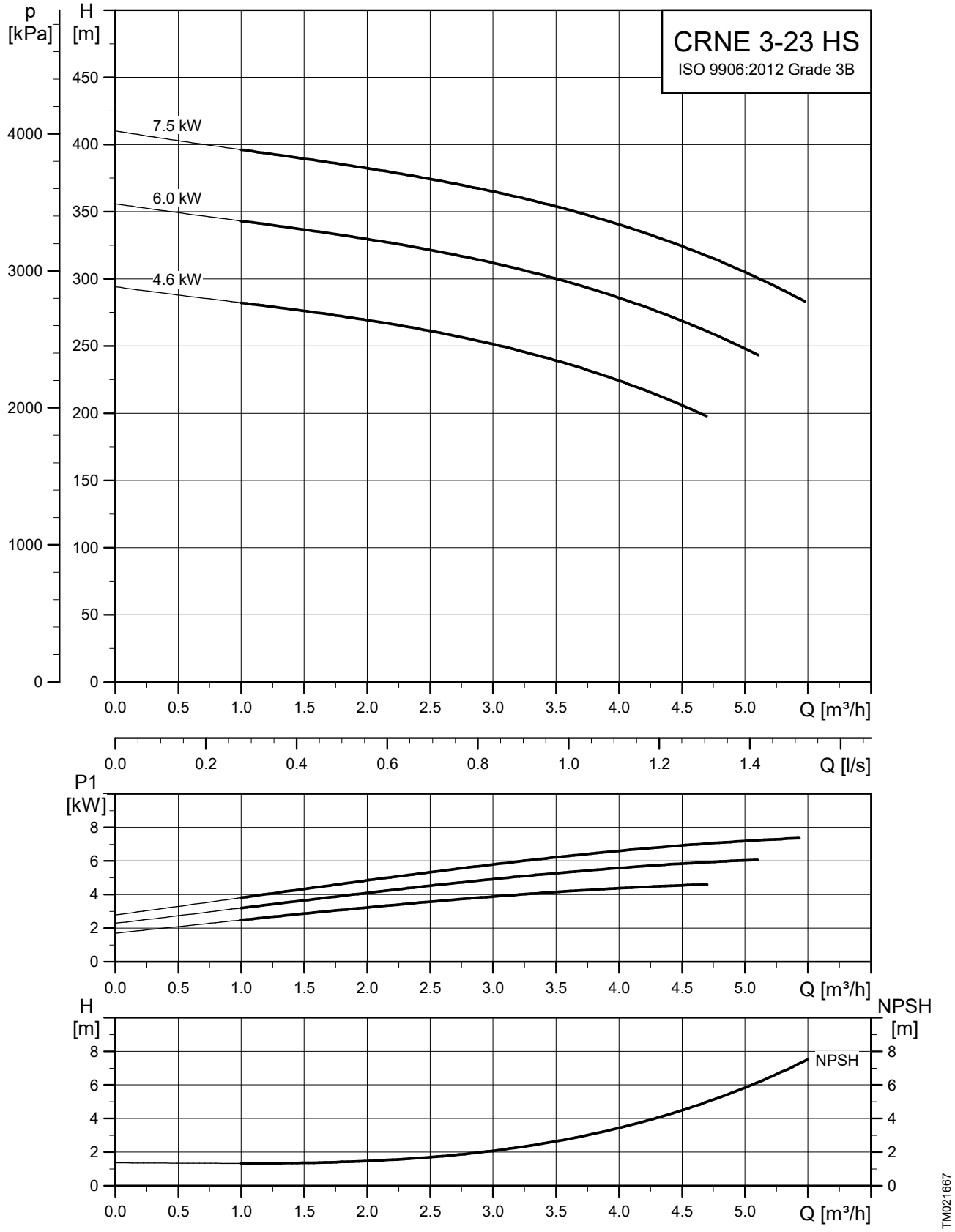

Dimensional sketches

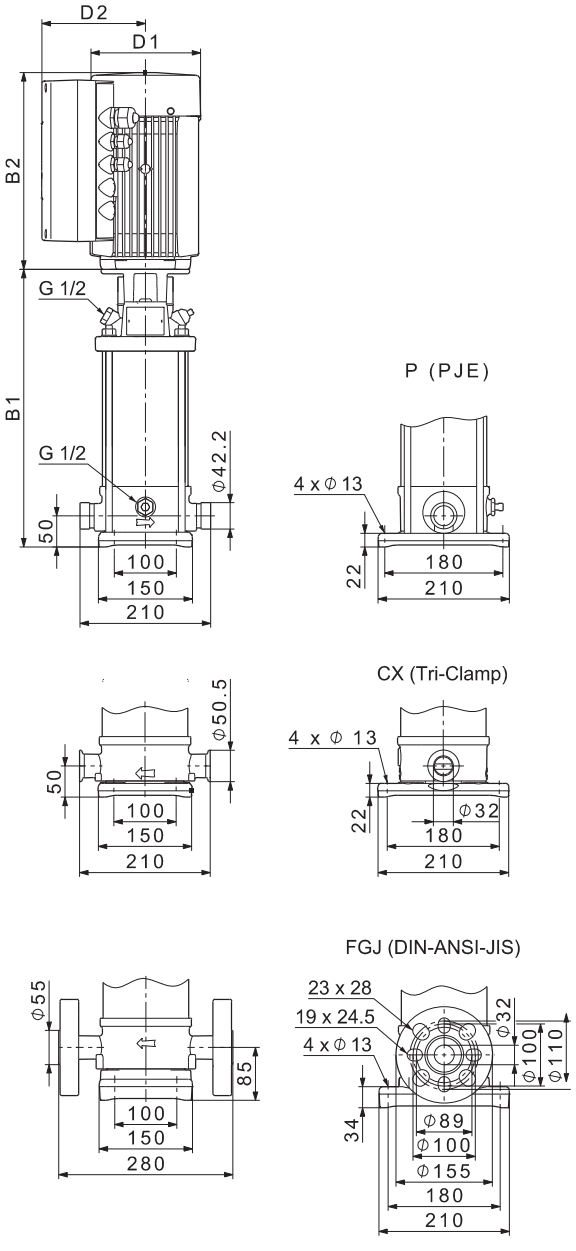

Dimensions and weights

Pump type	Motor P_2 [kW]	Dimensions [mm]							Net weight [kg]	
		PJE/CX		DIN flange		D1	D2	D3	PJE/CX	DIN flange
		B1	B1+B2	B1	B1+B2					
CRNE 3-23 HS	4.6	680	1014	715	1049	191	201	160	50	57
CRNE 3-23 HS	6	680	1014	715	1049	191	201	160	53	61
CRNE 3-23 HS	7.5	680	1068	715	1103	255	237	160	74	82

CRN 3 SF, 50 Hz

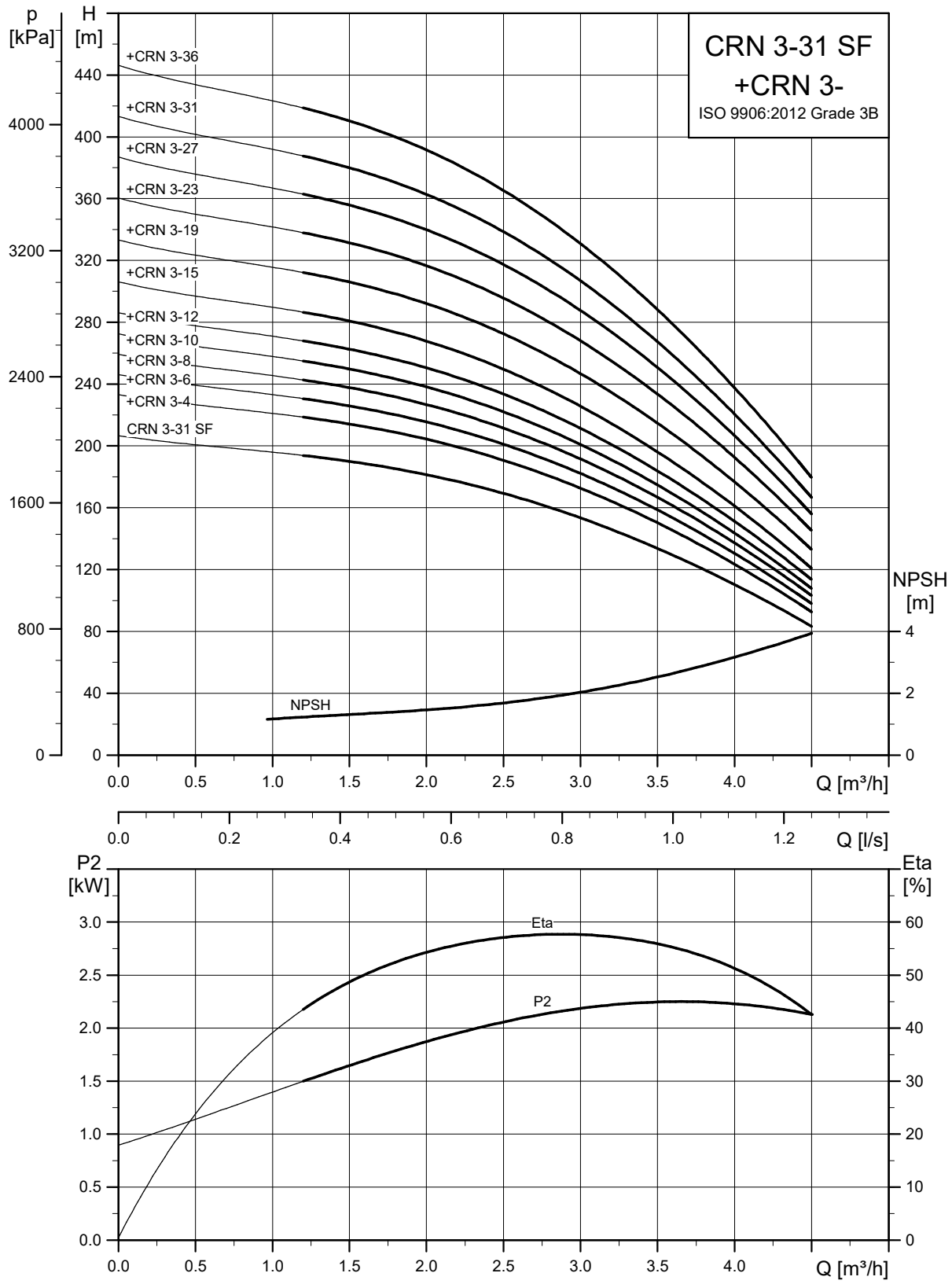
CRN 3-31 SF
+CRN 3-
ISO 9906:2012 Grade 3B
p [kPa]
H [m]
+CRN 3-36
+CRN 3-31
+CRN 3-27
+CRN 3-23
+CRN 3-19
+CRN 3-15
+CRN 3-12
+CRN 3-10
+CRN 3-8
+CRN 3-6
+CRN 3-4
CRN 3-31 SF
NPSH
NPSH [m]
Q [m³/h]
Q [l/s]
P2 [kW]
Eta [%]
Eta
P2
TM039794

Dimensional sketches

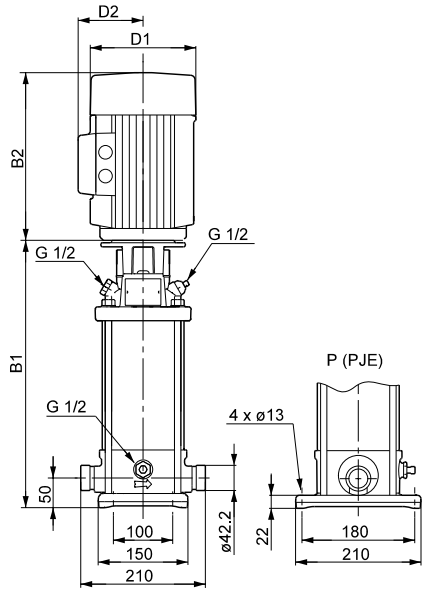

TM040019

CRN feed pump/CRN-SF high-pressure pump

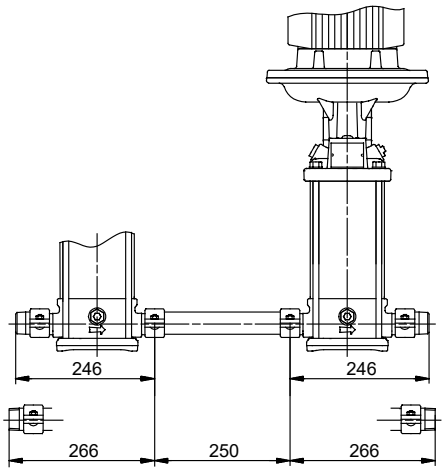

TM027377

CRN feed pump (left), connecting pipe (middle) and CRN SF high-pressure pump (right)

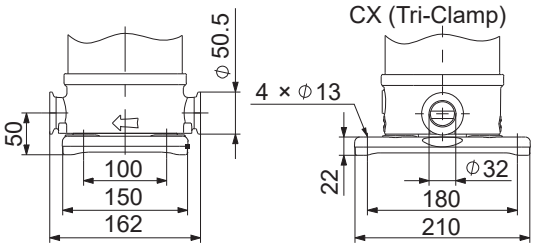

TM064977

CRN feed pump

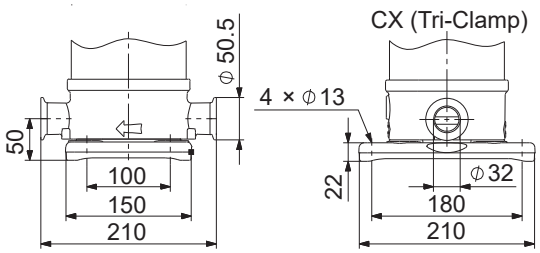

TM045859

CRN-SF high-pressure pump

FGJ (DIN-ANSI-JIS), PN 25 / DN 25/32

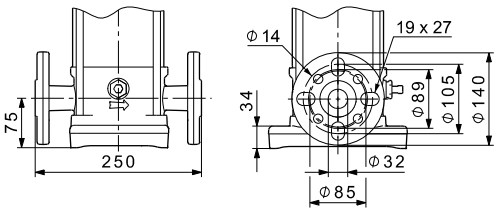

TM045864

CRN feed pump

FGJ (DIN-ANSI-JIS), PN 63 / DN 25/32

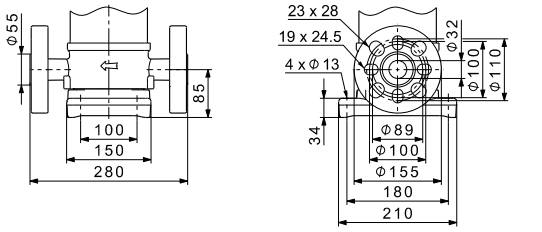

TM045862

CRN-SF high-pressure pump

Dimensions and weights

Pump type	Motor P_2 [kW]	CRN							
		Dimensions [mm]						Net weight [kg]	
		PJE/CX		DIN flange		D1	D2	PJE/CX	DIN flange
		B1	B1+B2	B1	B1+B2				
CRN 3-4	0.37	275	466	300	491	141	109	17	21
CRN 3-6	0.55	311	502	336	527	141	109	17	22
CRN 3-8	0.75	353	584	378	609	141	109	22	26
CRN 3-10	0.75	389	620	414	645	141	109	22	27
CRN 3-12	1.1	425	676	450	701	141	109	25	29
CRN 3-15	1.1	479	730	504	755	141	109	26	31
CRN 3-19	1.5	567	848	592	873	178	110	34	38
CRN 3-23	2.2	639	960	664	985	178	110	39	43

Pump type	Motor P_2 [kW]	CRN							
		Dimensions [mm]						Net weight [kg]	
		PJE/CX		DIN flange		D1	D2	PJE/CX	DIN flange
		B1	B1+B2	B1	B1+B2				
CRN 3-27	2.2	711	1032	736	1057	178	110	41	45
CRN 3-31	3	788	1123	813	1148	198	120	48	52
CRN 3-36	3	878	1213	903	1238	198	120	50	54
CRN 3-31 SF [8)]	3	820	1192	855	1227	220	134	43	50

8) High-pressure pump. A frequency-controlled CRNE 3-25 SF pump is available. See performance curves and dimensions in Grundfos Product Center at http://product-selection.grundfos.com.

CRN 5 SF, 50 Hz

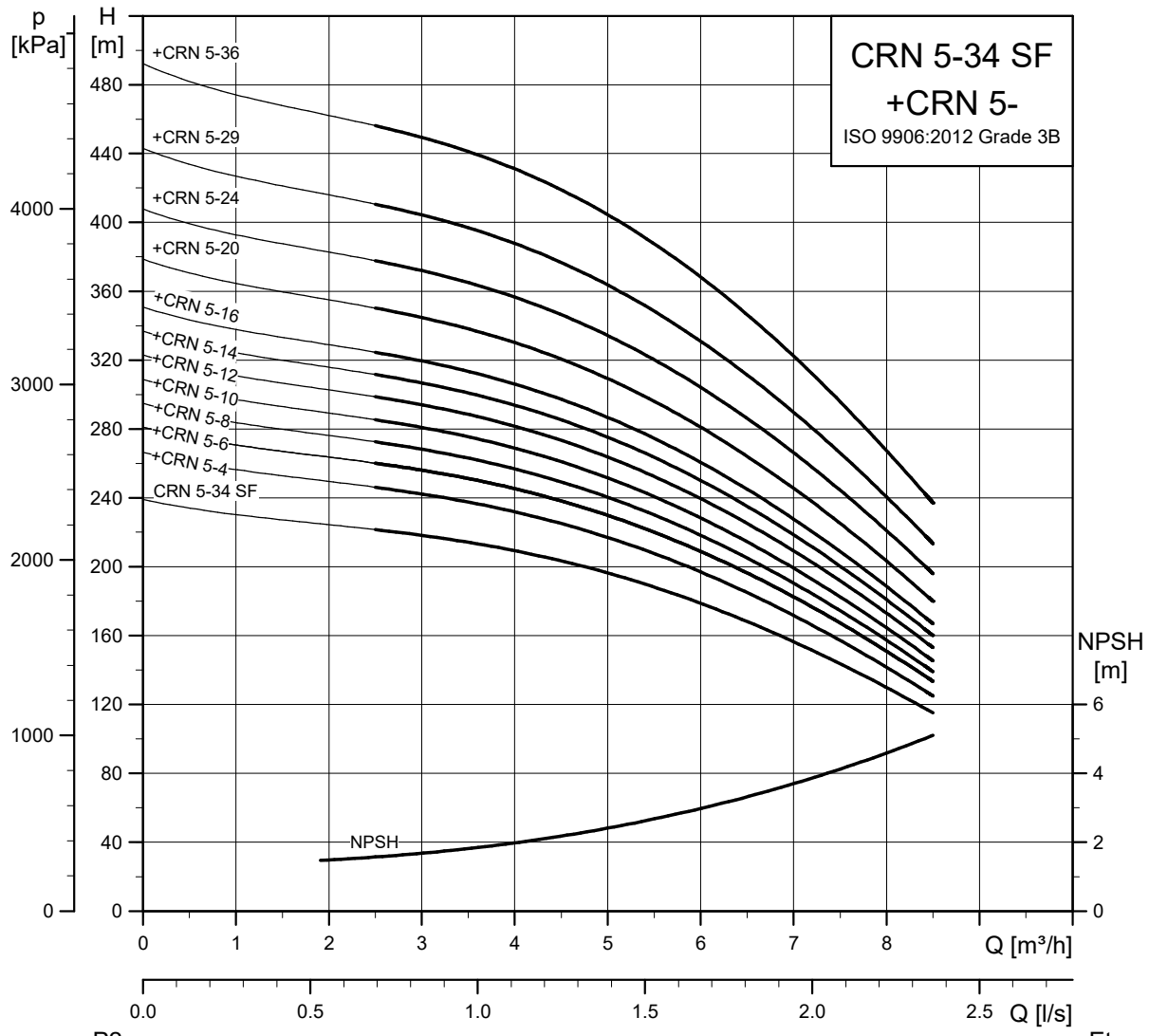

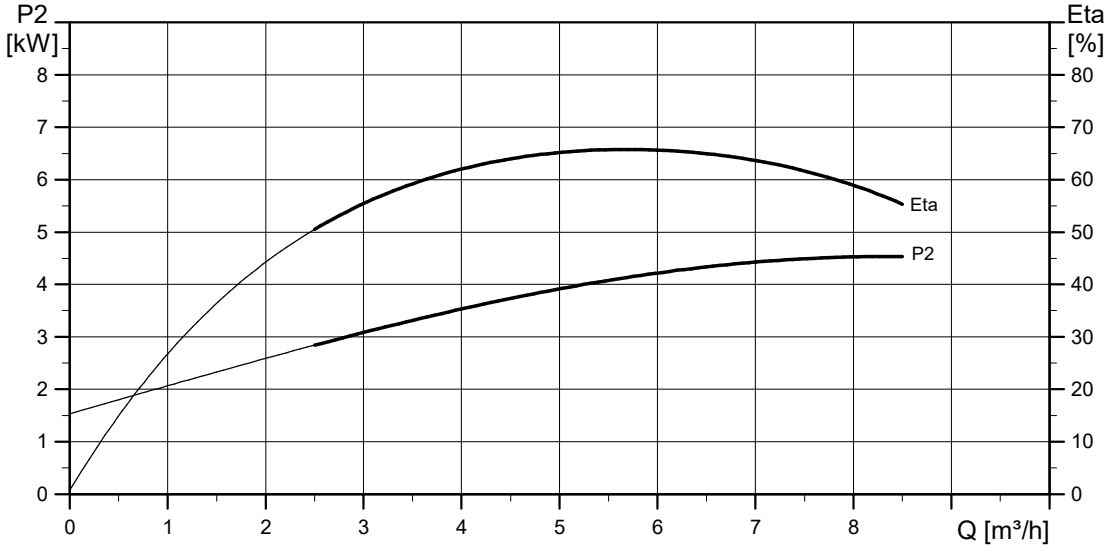

TM027447

Dimensional sketches

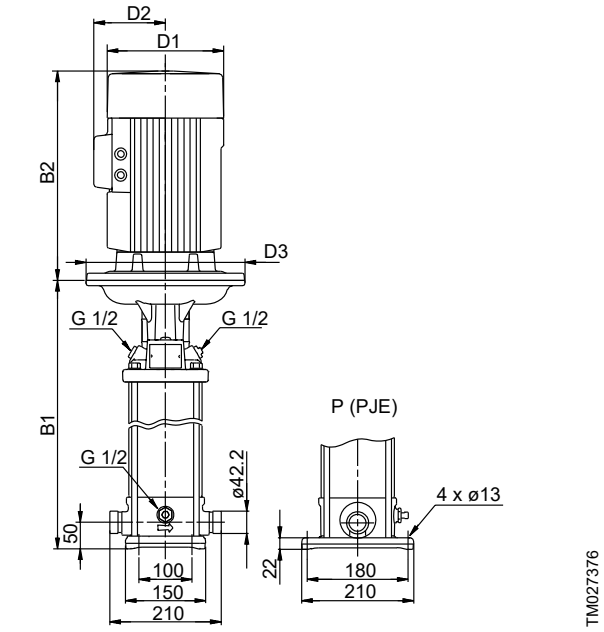

CRN feed pump/CRN-SF high-pressure pump

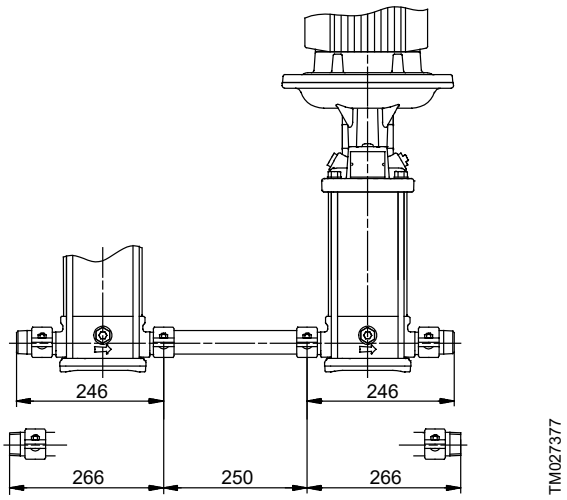

CRN feed pump (left), connecting pipe (middle) and CRN SF high-pressure pump (right)

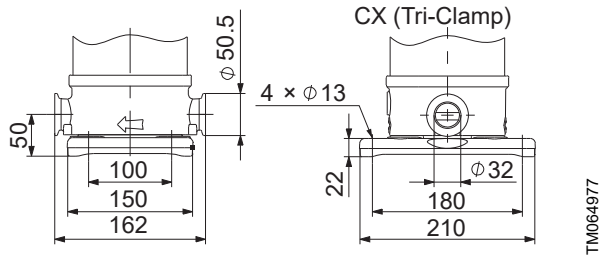

CRN feed pump

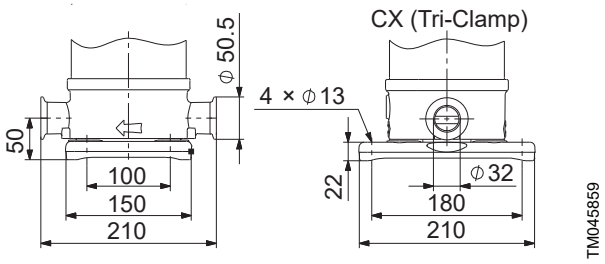

CRN-SF high-pressure pump

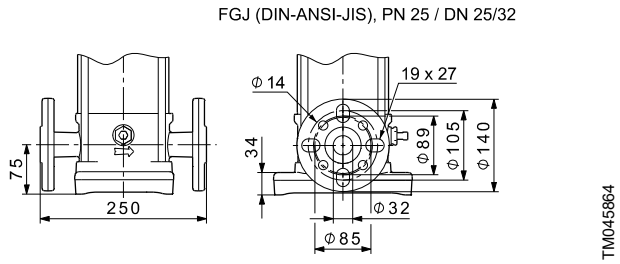

CRN feed pump

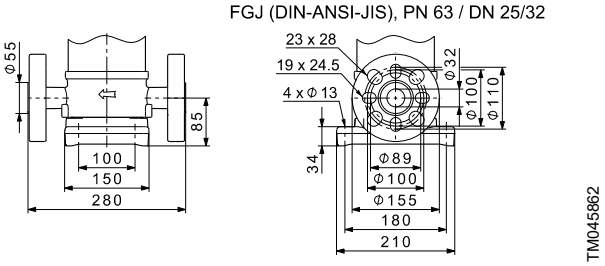

CRN-SF high-pressure pump

Dimensions and weights

Pump type	Motor P_2 [kW]	Dimensions [mm]							Net weight [kg]	
		PJE/CX		DIN flange		D1	D2	D3	PJE/CX	DIN flange
		B1	B1+B2	B1	B1+B2					
CRN 5-4	0.55	311	502	336	527	141	109	-	17	21
CRN 5-6	1.1	371	622	396	647	141	109	-	24	28
CRN 5-8	1.1	425	676	450	701	141	109	-	25	29
CRN 5-10	1.5	495	776	520	801	178	110	-	32	36
CRN 5-12	2.2	549	870	574	895	178	110	-	37	41
CRN 5-14	2.2	603	924	628	949	178	110	-	38	42
CRN 5-16	2.2	657	978	682	1003	178	110	-	39	43

Pump type	Motor P_2 [kW]	Dimensions [mm]							Net weight [kg]	
		PJE/CX		DIN flange		D1	D2	D3	PJE/CX	DIN flange
		B1	B1+B2	B1	B1+B2					
CRN 5-20	3	770	1105	795	1130	198	120	-	47	51
CRN 5-24	4	878	1250	903	1275	220	134	-	61	65
CRN 5-29	4	1013	1385	1038	1410	220	134	-	64	68
CRN 5-36	5.5	1231	1622	1256	1647	220	134	300	78	82
CRN 5-34 SF [9]	5.5	1228	1619	1228	1619	220	134	300	76	76

[9] High-pressure pump. A frequency-controlled CRNE 5-24 SF pump is available. See performance curves and dimensions in Grundfos Product Center at http://product-selection.grundfos.com.

CRN 10 SF, 50 Hz

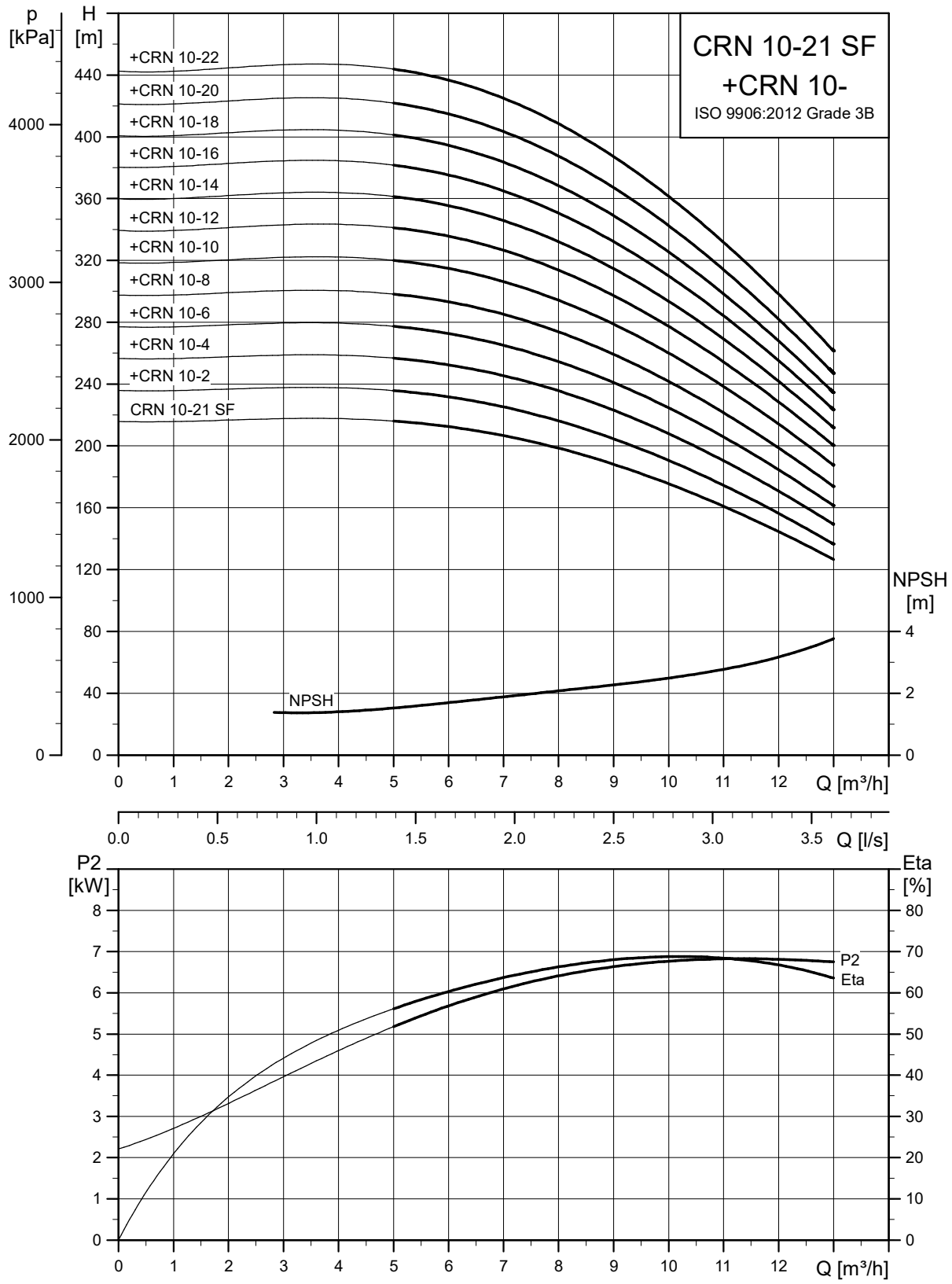

Dimensional sketches

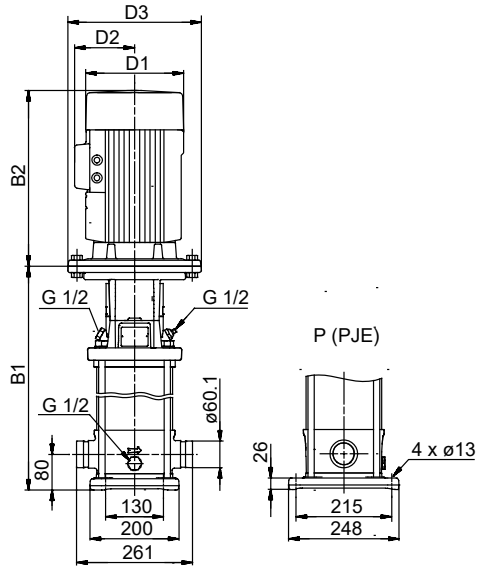

TM027378

CRN feed pump/CRN-SF high-pressure pump

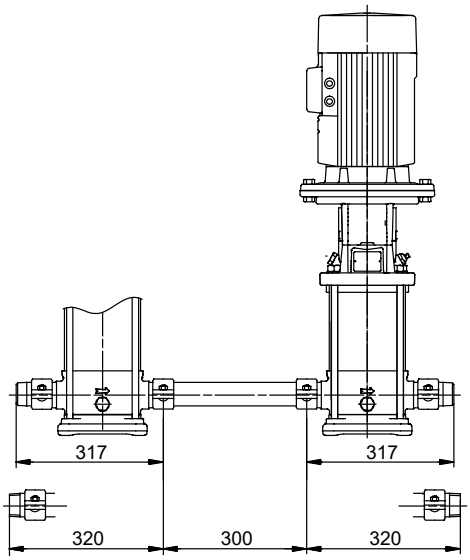

TM027381

CRN feed pump (left), connecting pipe (middle) and CRN SF high-pressure pump (right)

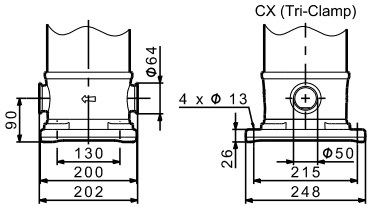

TM064978

CRN feed pump

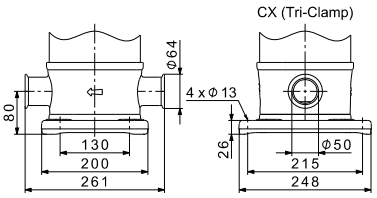

TM045860

CRN-SF high-pressure pump

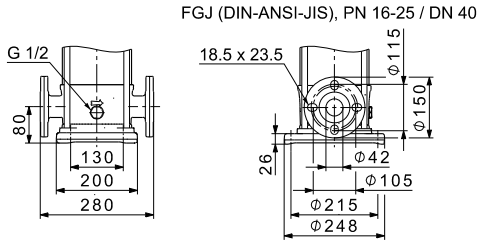

TM045865

CRN feed pump

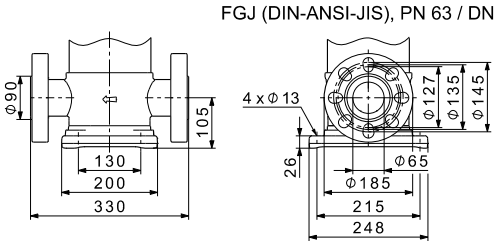

TM045863

CRN-SF high-pressure pump

Dimensions and weights

Pump type	Motor P_2 [kW]	Dimensions [mm]							Net weight [kg]	
		PJE/CX		DIN flange		D1	D2	D3	PJE/CX	DIN flange
		B1	B1+B2	B1	B1+B2					
CRN 10-2	0.75	357	588	357	588	141	109	-	31	35
CRN 10-4	1.5	433	714	433	714	178	110	-	42	45
CRN 10-6	2.2	493	814	493	814	178	110	-	48	51
CRN 10-8	3	558	893	558	893	198	120	-	55	59
CRN 10-10	4	618	990	618	990	220	134	-	69	73
CRN 10-12	4	678	1050	678	1050	220	134	-	71	75
CRN 10-14	5.5	770	1161	770	1161	220	134	300	90	94
CRN 10-16	5.5	830	1221	830	1221	220	134	300	92	96

Pump type	Motor P_2 [kW]	Dimensions [mm]							Net weight [kg]	
		PJE/CX		DIN flange		D1	D2	D3	PJE/CX	DIN flange
		B1	B1+B2	B1	B1+B2					
CRN 10-18	7.5	890	1269	890	1269	260	159	300	104	108
CRN 10-20	7.5	950	1329	950	1329	260	159	300	106	110
CRN 10-22	7.5	1010	1389	1010	1389	260	159	300	108	112
CRN 10-21 SF [10)]	7.5	1010	1389	1035	1414	260	159	300	109	109

10) High-pressure pump. A frequency-controlled CRNE 10-17 SF pump is available. See performance curves and dimensions in Grundfos Product Center at http://product-selection.grundfos.com.

CRN 15 SF, 50 Hz

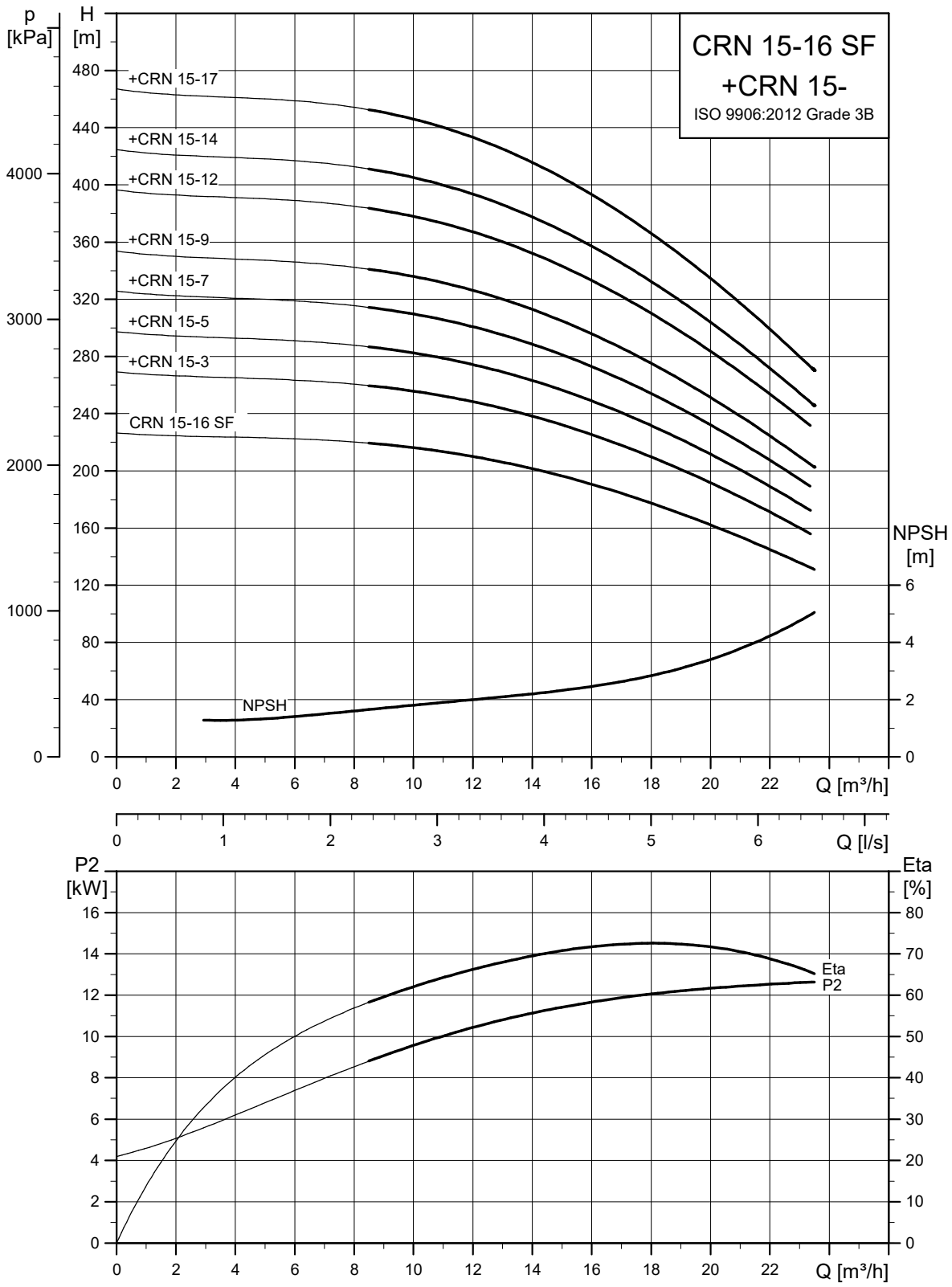

Dimensional sketches

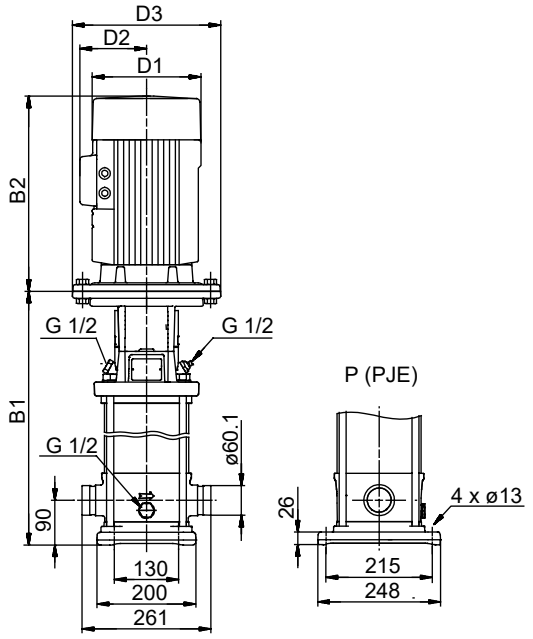

CRN feed pump/CRN-SF high-pressure pump

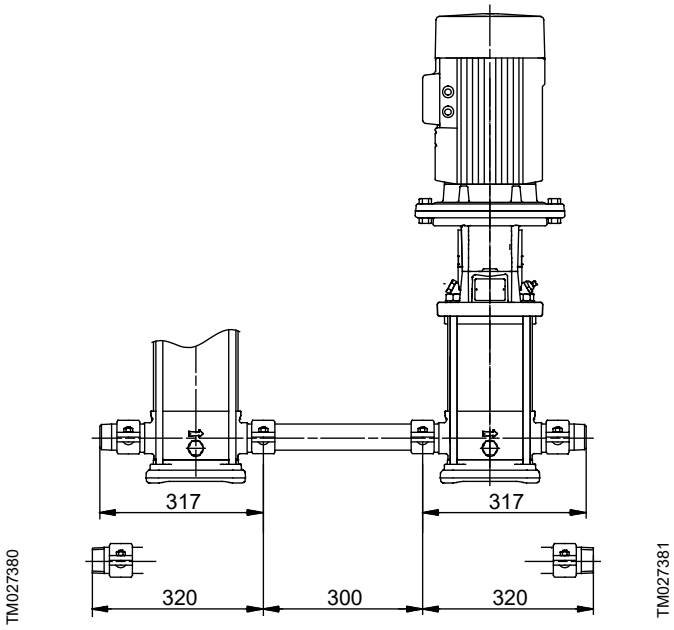

CRN feed pump (left), connecting pipe (middle) and CRN SF high-pressure pump (right)

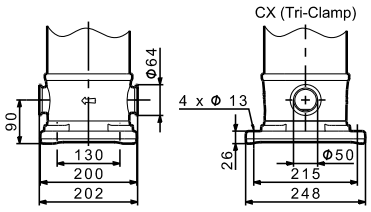

CRN feed pump

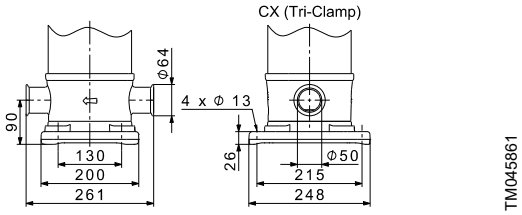

CRN-SF high-pressure pump

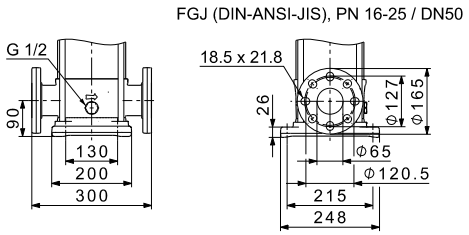

CRN feed pump

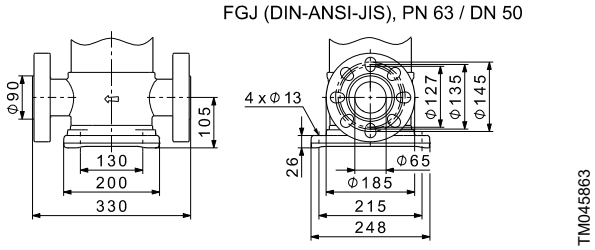

CRN-SF high-pressure pump

Dimensions and weights

Pump type	Motor P_2 [kW]	Dimensions [mm]							Net weight [kg]	
		PJE/CX		DIN flange		D1	D2	D3	PJE/CX	DIN flange
		B1	B1+B2	B1	B1+B2					
CRN 15-3	3	463	798	463	798	198	120	-	52	56
CRN 15-5	4	553	925	553	925	220	134	-	67	71
CRN 15-7	5.5	675	1066	675	1066	220	134	300	86	91
CRN 15-9	7.5	765	1144	765	1144	260	159	300	100	104

Pump type	Motor P_2 [kW]	Dimensions [mm]							Net weight [kg]	
		PJE/CX		DIN flange		D1	D2	D3	PJE/CX	DIN flange
		B1	B1+B2	B1	B1+B2					
CRN 15-12	11	977	1459	977	1459	318	204	350	145	150
CRN 15-14	11	1067	1549	1067	1549	318	204	350	149	153
CRN 15-17	15	1202	1684	1202	1684	318	204	350	165	170
CRN 15-16 SF [11)]	15	1202	1684	1202	1684	318	204	350	172	181

11) High-pressure pump. A frequency-controlled CRNE 15-11 SF pump is available. See performance curves and dimensions in Grundfos Product Center at http://product-selection.grundfos.com.

CRN 20 SF, 50 Hz

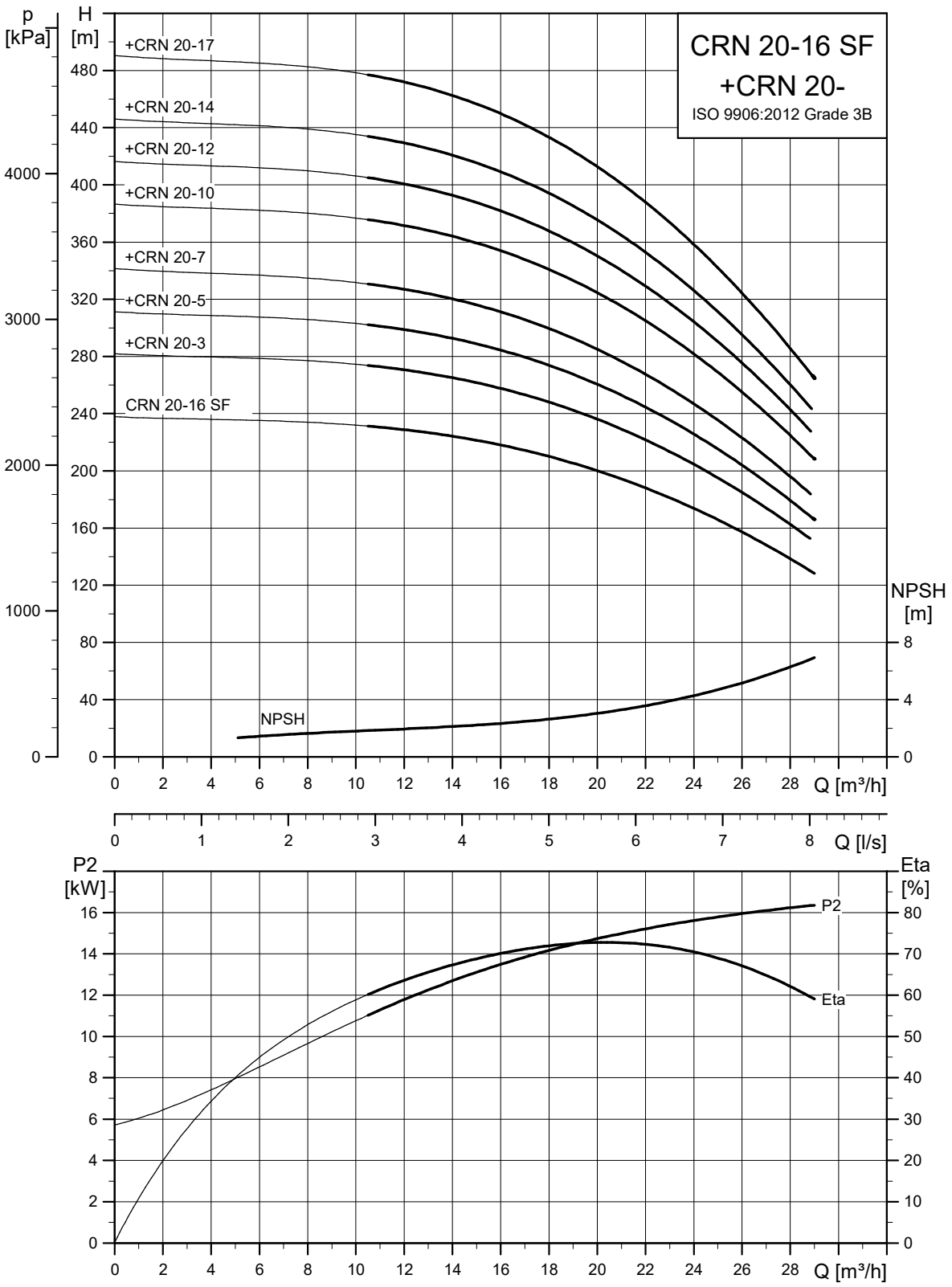

Dimensional sketches

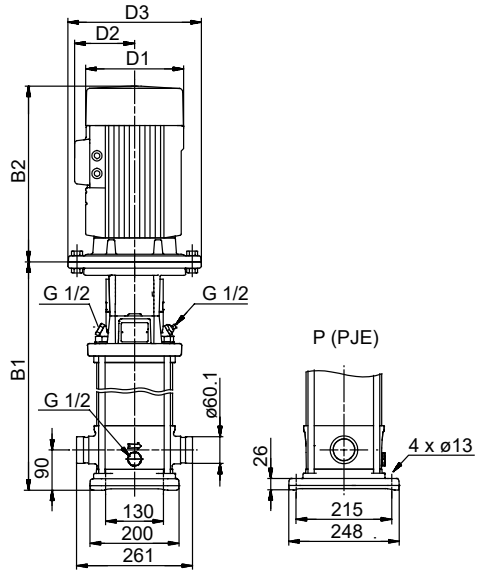

TM027380

CRN feed pump/CRN-SF high-pressure pump

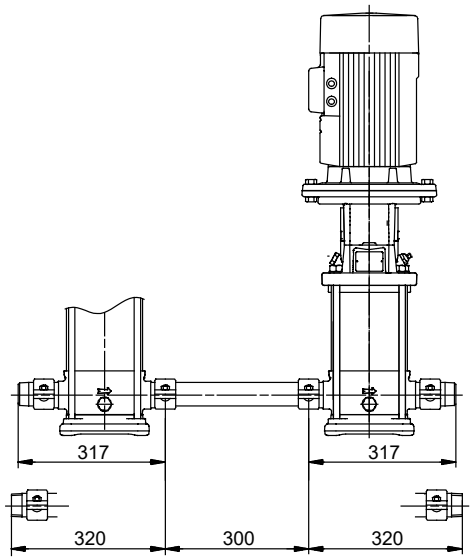

TM027381

CRN feed pump (left), connecting pipe (middle) and CRN-SF high-pressure pump (right)

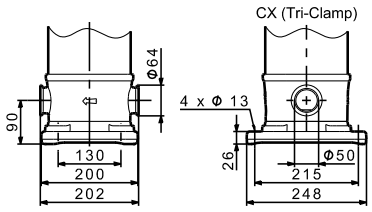

TM064978

CRN feed pump

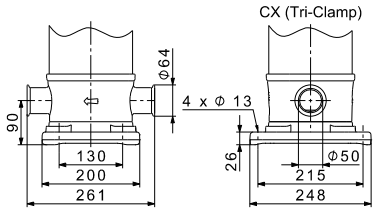

TM045861

CRN-SF high-pressure pump

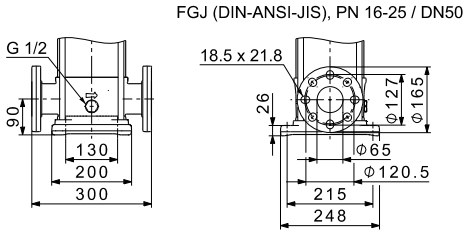

TM045866

CRN feed pump

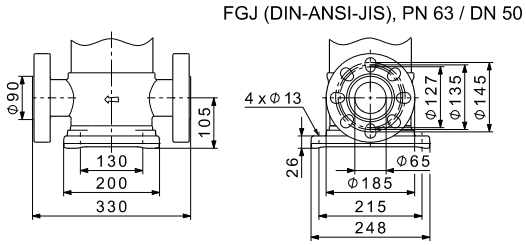

TM045863

CRN-SF high-pressure pump

Dimensions and weights

Pump type	Motor P_2 [kW]	Dimensions [mm]							Net weight [kg]	
		PJE/CX		DIN flange		D1	D2	D3	PJE/CX	DIN flange
		B1	B1+B2	B1	B1+B2					
CRN 20-3	4	463	835	463	835	220	134	-	63	68
CRN 20-5	5.5	585	976	585	976	220	134	300	83	88
CRN 20-7	7.5	675	1054	675	1054	260	159	300	96	101
CRN 20-10	11	887	1358	887	1358	314	204	350	142	147
CRN 20-12	15	977	1459	977	1459	318	204	350	157	162
CRN 20-14	15	1067	1549	1067	1549	318	204	350	161	165
CRN 20-17	18.5	1202	1728	1202	1728	318	204	350	178	183
CRN 20-16 SF [12]	18.5	1202	1728	1202	1728	318	204	350	178	183

[12] High-pressure pump. A frequency-controlled CRNE 20-9 SF pump is available. See performance curves and dimensions in Grundfos Product Center at http://product-selection.grundfos.com.

CRN 32 SF, 50 Hz

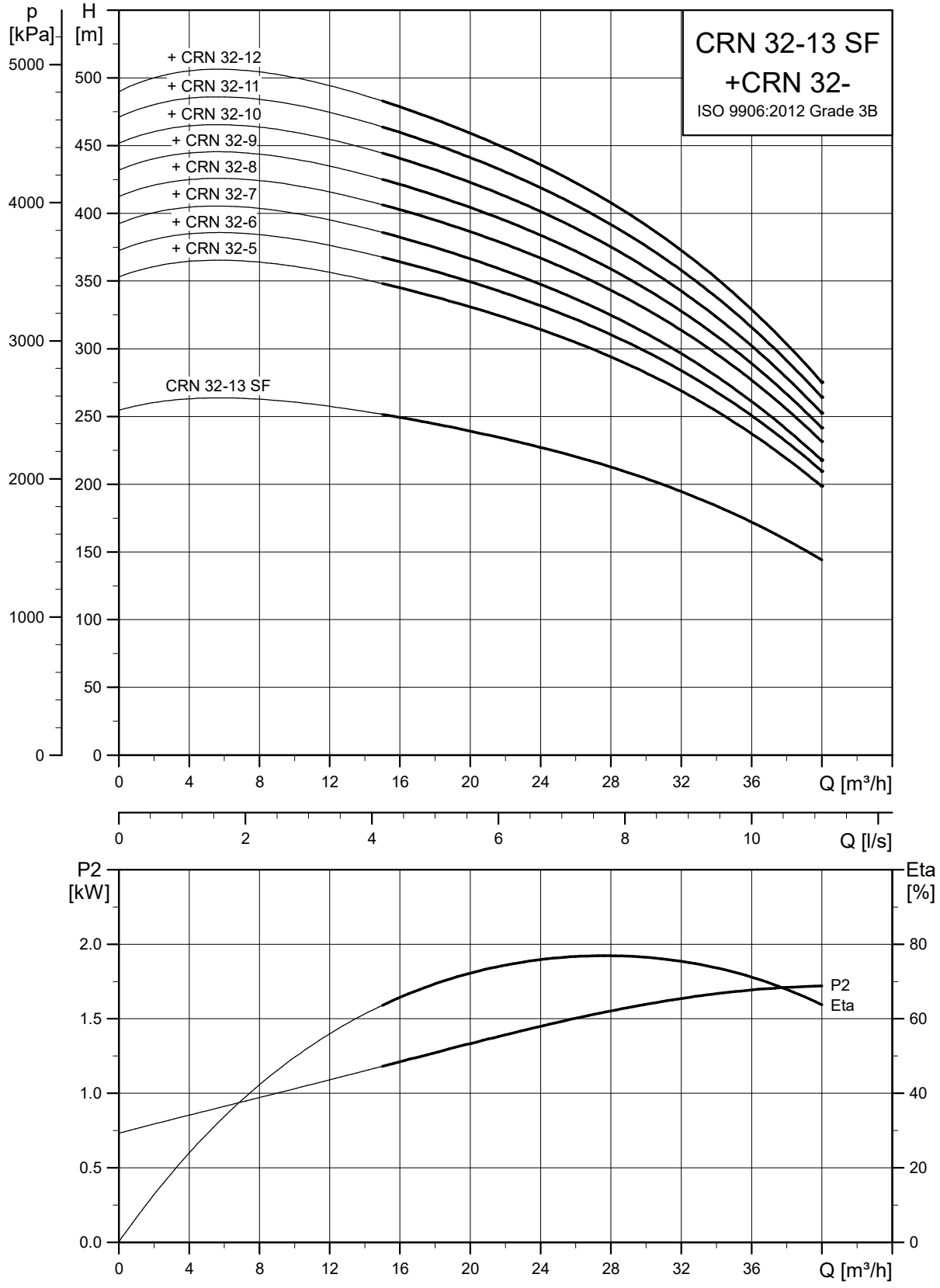

Dimensional sketches

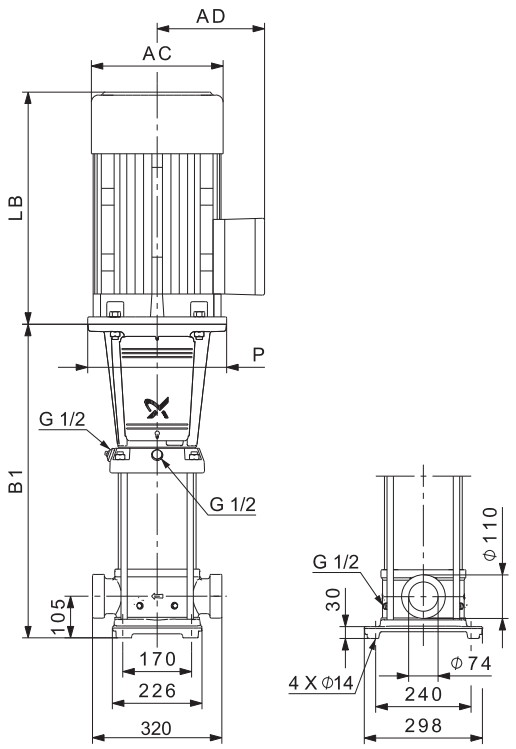

CRN feed pump/CRN high-pressure pump

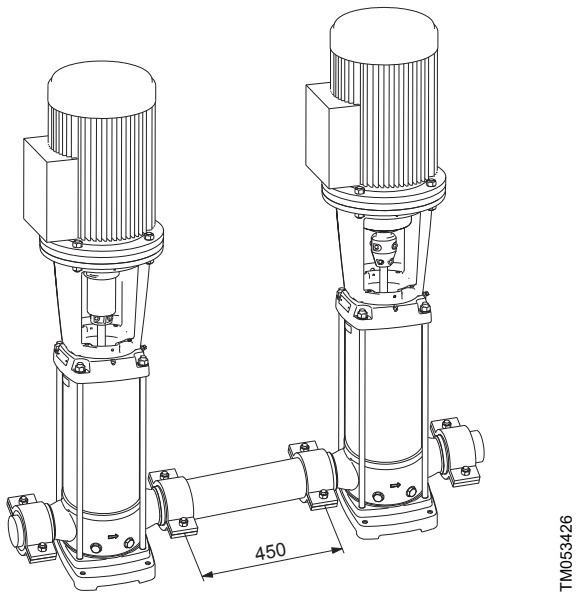

CRN feed pump, connecting pipe and CRN high-pressure pump

Dimensions and weights

Pump type	Motor P_2 [kW]	Dimensions [mm]					Net weight [kg]
		B1	B1+B2	D1	D2	D3	
CRN 32-5	11	895	1377	318	204	350	160
CRN 32-6	11	965	1447	318	204	350	163
CRN 32-7	15	1035	1517	318	204	350	178
CRN 32-8	15	1105	1587	318	204	350	184
CRN 32-9	18.5	1175	1701	318	204	350	200
CRN 32-10	18.5	1245	1771	318	204	350	204
CRN 32-11	22	1315	1867	318	204	350	222
CRN 32-12	22	1385	1937	318	204	350	225
CRN 32-13 SF [13]	30	1525	2136	407	315	400	328

[13] High-pressure pump.

CRN 45 SF, 50 Hz

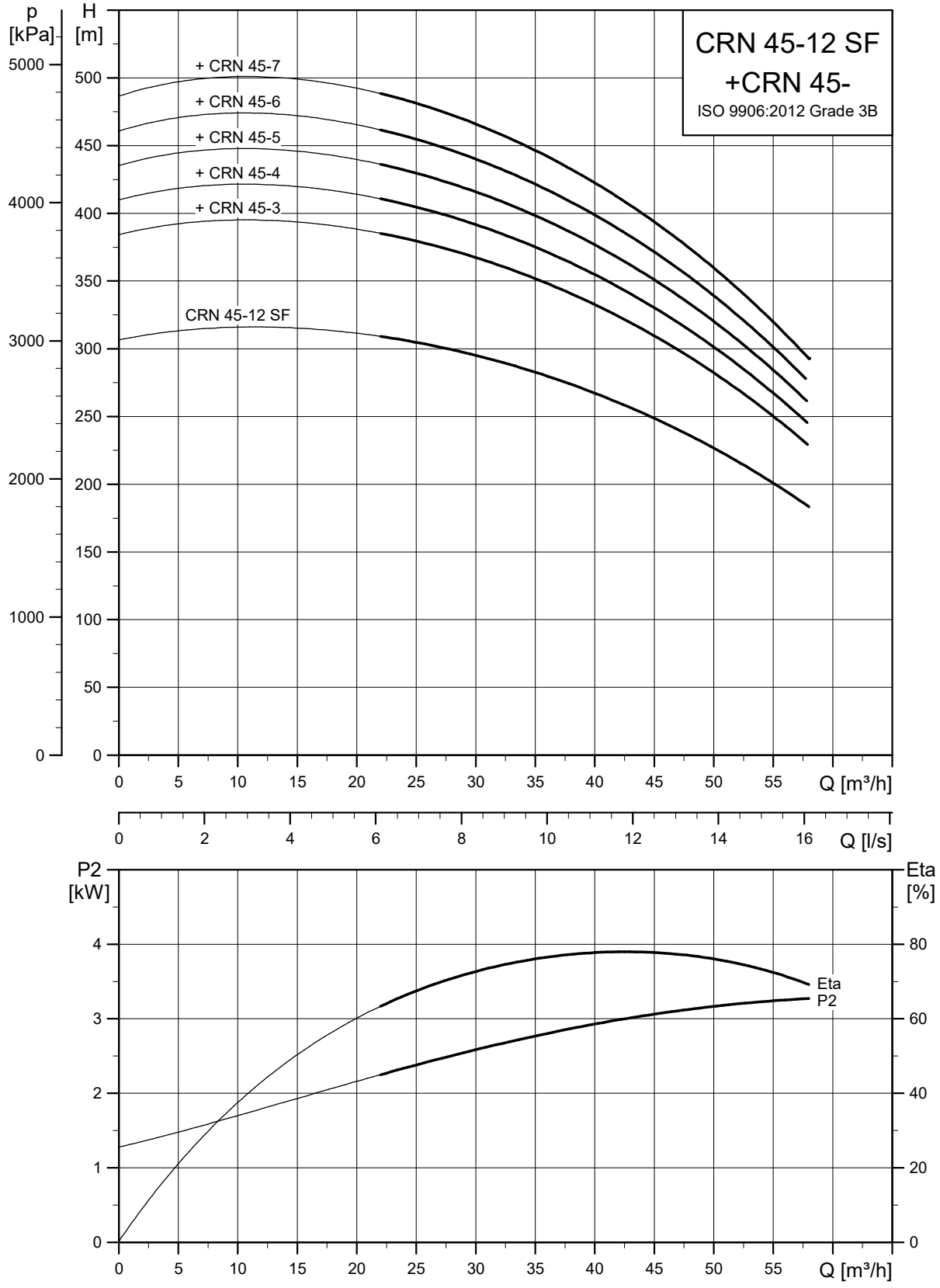

Dimensional sketches

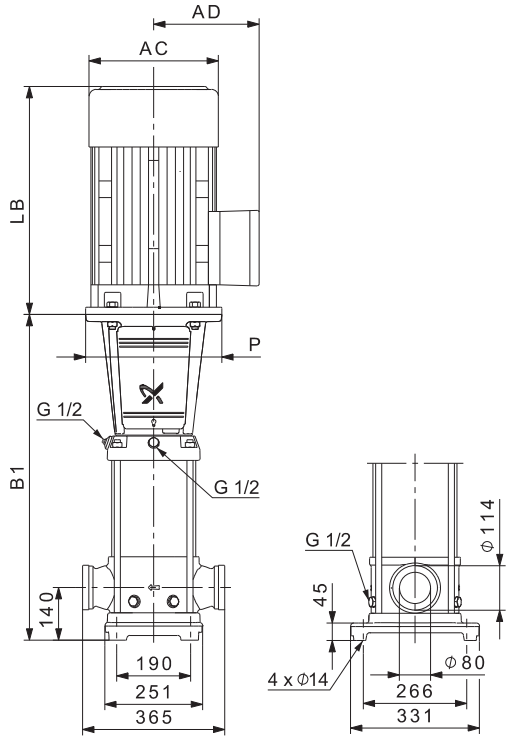

TM057217

CRN feed pump/CRN high-pressure pump

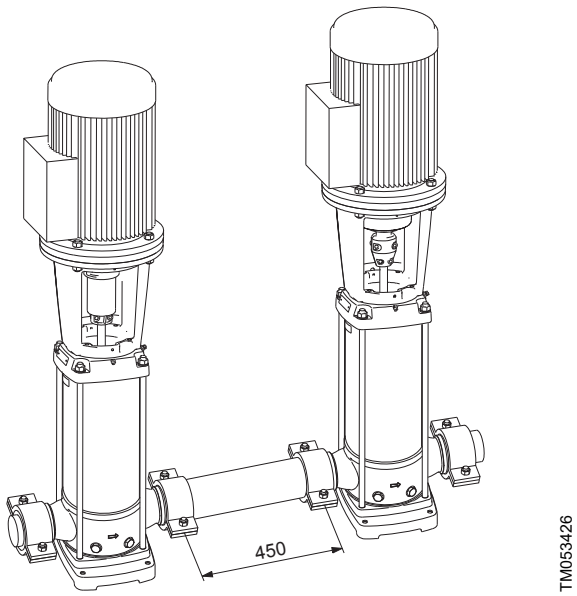

TM053426

CRN feed pump, connecting pipe and CRN high-pressure pump

Dimensions and weights

Pump type	Motor P_2 [kW]	Dimensions [mm]					Net weight [kg]
		B1	B1+B2	D1	D2	D3	
CRN 45-3	11	829	1311	318	204	350	164
CRN 45-4	15	909	1391	318	204	350	179
CRN 45-5	18.5	989	1515	318	204	350	195
CRN 45-6	22	1069	1621	318	204	350	217
CRN 45-7	30	1149	1760	396	315	400	324
CRN 45-12 SF [14]	45	1629	2337	449	338	450	450

[14] High-pressure pump.

CRN 64 SF, 50 Hz

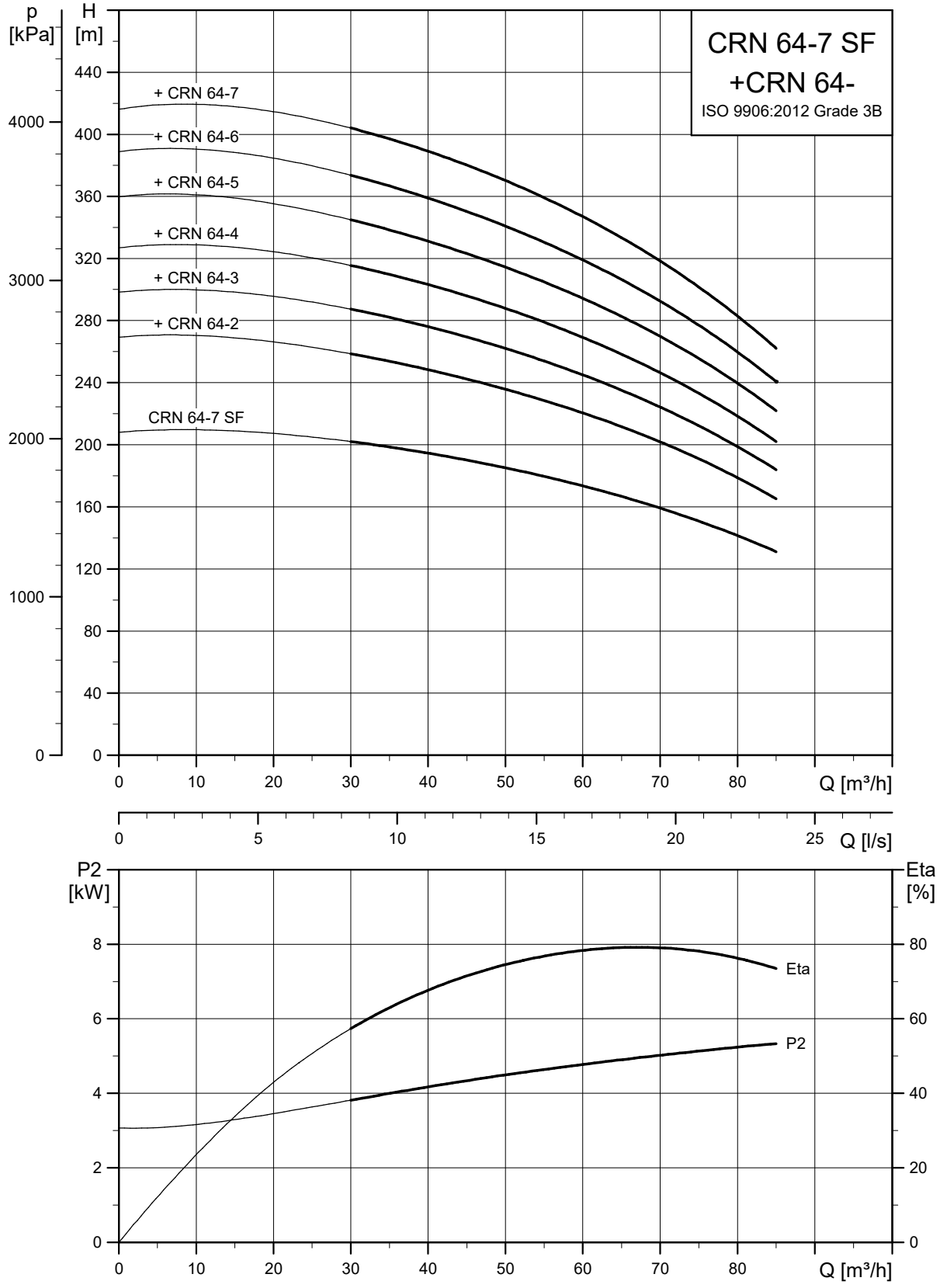

Dimensional sketches

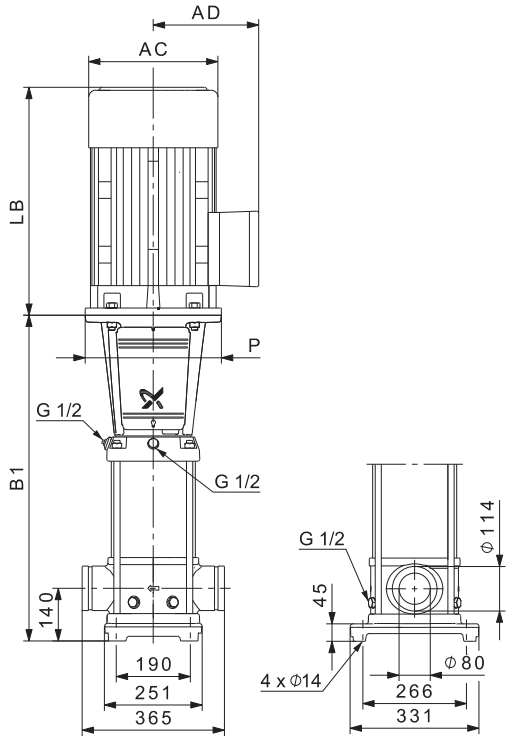

CRN feed pump/CRN high-pressure pump

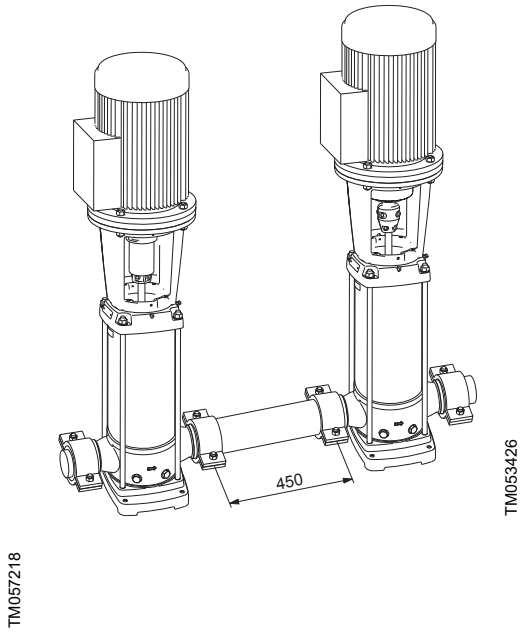

CRN feed pump, connecting pipe and CRN high-pressure pump

Dimensions and weights

Pump type	Motor P_2 [kW]	Dimensions [mm]					Net weight [kg]
		B1	B1+B2	D1	D2	D3	
CRN 64-2	11	754	1236	318	204	350	162
CRN 64-3	18.5	836	1362	318	204	350	191
CRN 64-4	22	919	1471	318	204	350	211
CRN 64-5	30	1001	1612	396	315	400	318
CRN 64-6	37	1084	1720	396	315	400	350
CRN 64-7	45	1166	1874	449	338	450	444
CRN 64-7 SF [15]	45	1166	1874	449	338	450	443

[15] High-pressure pump.

CRN 3 SF, 60 Hz

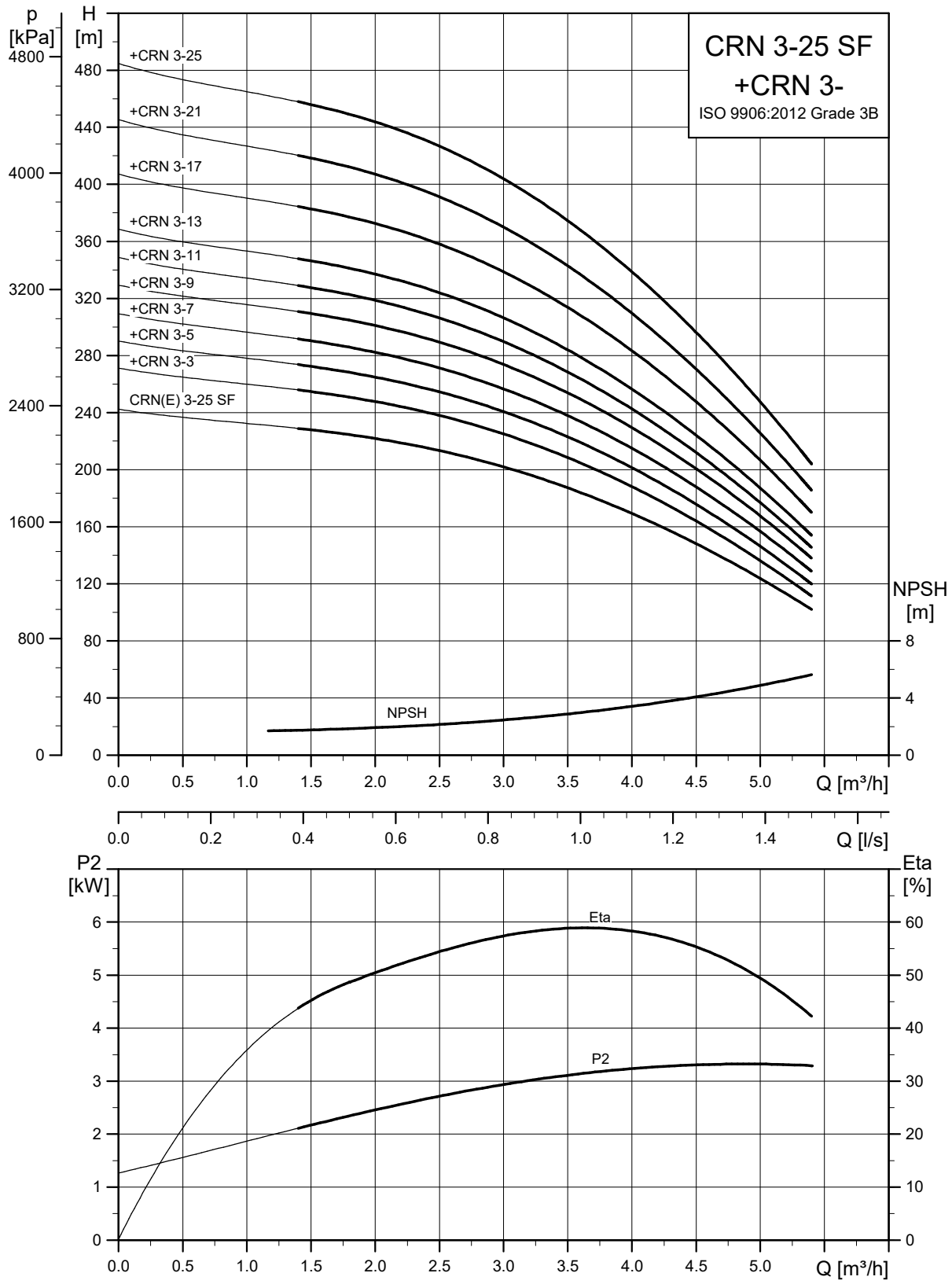
CRN 3-25 SF
+CRN 3-
ISO 9906:2012 Grade 3B
p [kPa]
H [m]
+CRN 3-25
+CRN 3-21
+CRN 3-17
+CRN 3-13
+CRN 3-11
+CRN 3-9
+CRN 3-7
+CRN 3-5
+CRN 3-3
CRN(E) 3-25 SF
NPSH
NPSH [m]
Q [m³/h]
Q [l/s]
P2 [kW]
Eta [%]
Eta
P2
TM039795

Dimensional sketches

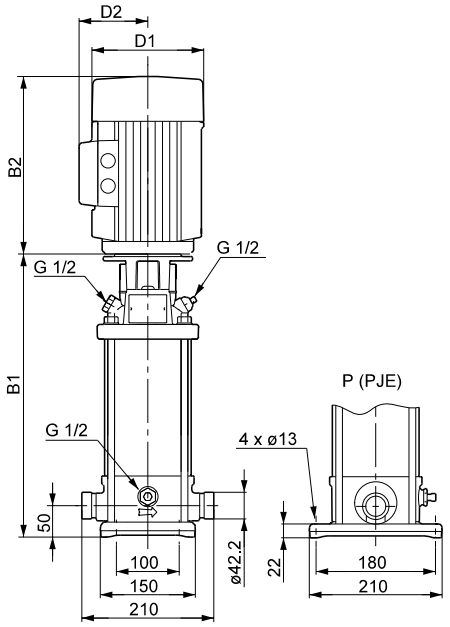

TM040019

CRN feed pump/CRN-SF high-pressure pump

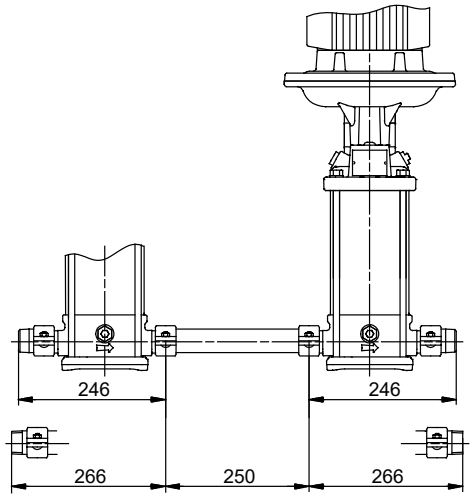

TM027377

CRN feed pump (left), connecting pipe (middle) and CRN SF high-pressure pump (right)

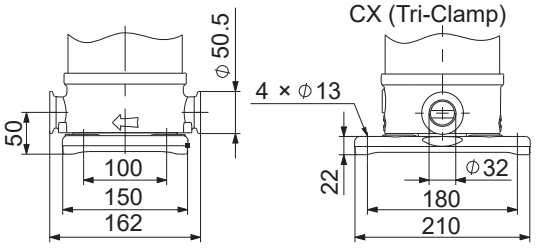

TM064977

CRN feed pump

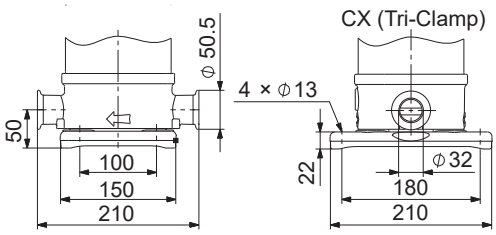

TM045859

CRN-SF high-pressure pump

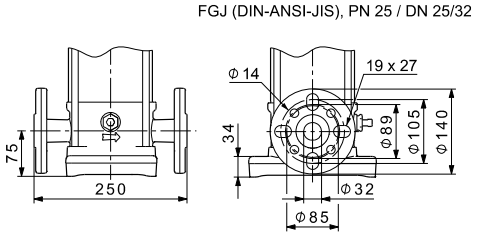

TM045864

CRN feed pump

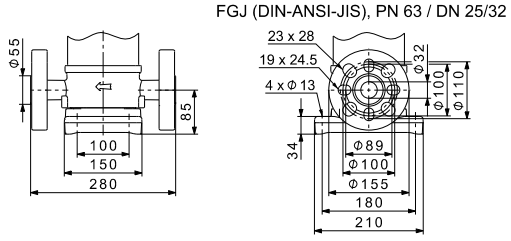

TM045862

CRN-SF high-pressure pump

Dimensions and weights

Pump type	Motor P_2 [kW]	CRN/CRNE Dimensions [mm] PJE/CX B1	PJE/CX B1+B2	DIN flange B1	DIN flange B1+B2	D1	D2	Net weight [kg] PJE/CX	DIN flange
CRN 3-3	0.55	257	448	282	473	141	109	16	20
CRN 3-5	0.75	299	530	324	555	141	109	20	24
CRN 3-7	1.1	335	586	360	611	141	109	23	27
CRN 3-9	1.5	387	668	412	693	178	110	30	34
CRN 3-11	1.5	423	704	448	729	178	110	31	35
CRN 3-13	2.2	459	780	484	805	178	110	35	39

Pump type	Motor P_2 [kW]	CRN/CRNE							
		Dimensions [mm]						Net weight [kg]	
		PJE/CX		DIN flange		D1	D2	PJE/CX	DIN flange
		B1	B1+B2	B1	B1+B2				
CRN 3-17	2.2	531	852	556	877	178	110	37	41
CRN 3-21	3	608	943	633	968	198	120	44	48
CRN 3-25	4	680	1052	705	1077	220	134	57	61
CRN 3-25 SF [16]	4	708	1080	743	1115	220	134	44	60
CRNE 3-25 SF	4	716	1050	751	1085	191	201	47	54

16) High-pressure pump.

CRN 5 SF, 60 Hz

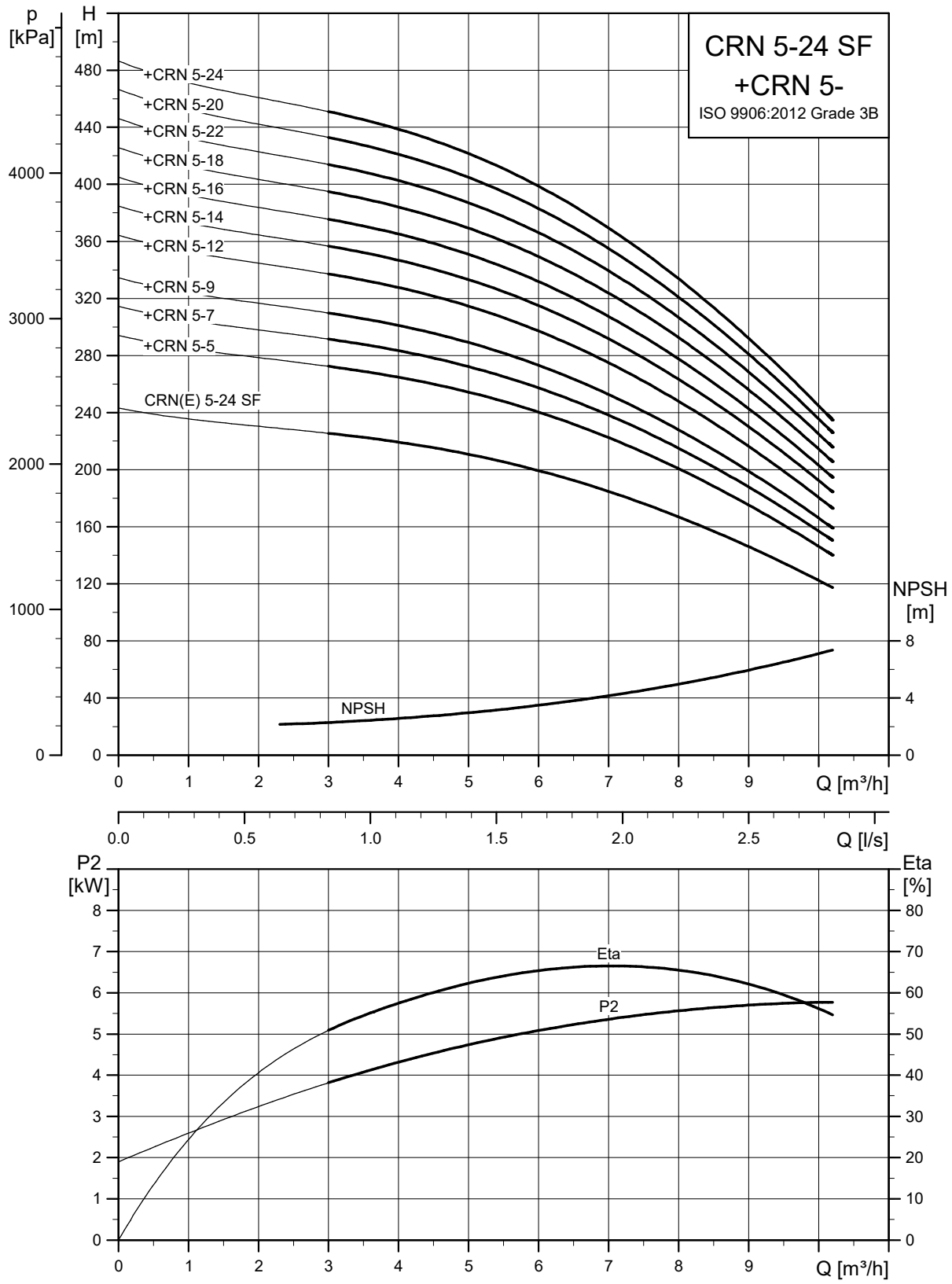
CRN 5-24 SF
+CRN 5-
ISO 9906:2012 Grade 3B
p [kPa]
H [m]
+CRN 5-24
+CRN 5-20
+CRN 5-22
+CRN 5-18
+CRN 5-16
+CRN 5-14
+CRN 5-12
+CRN 5-9
+CRN 5-7
+CRN 5-5
CRN(E) 5-24 SF
NPSH
NPSH [m]
Q [m³/h]
Q [l/s]
P2 [kW]
Eta [%]
Eta
P2
TM027448

Dimensional sketches

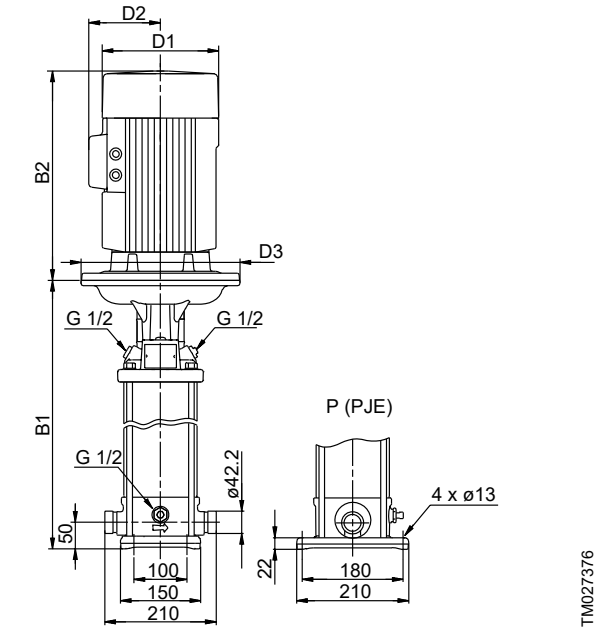

CRN feed pump/CRN-SF high-pressure pump

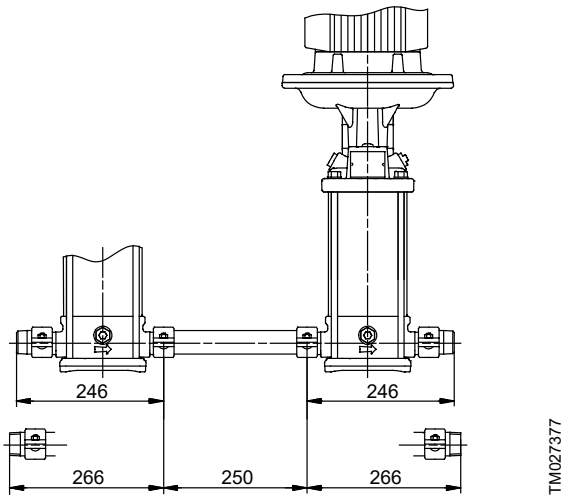

CRN feed pump (left), connecting pipe (middle) and CRN SF high-pressure pump (right)

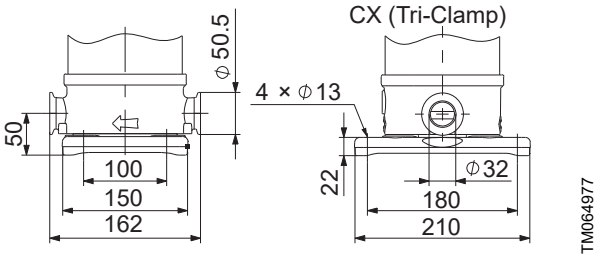

CRN feed pump

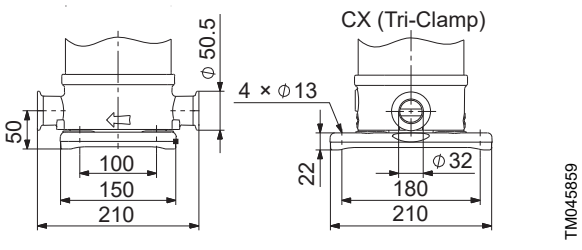

CRN-SF high-pressure pump

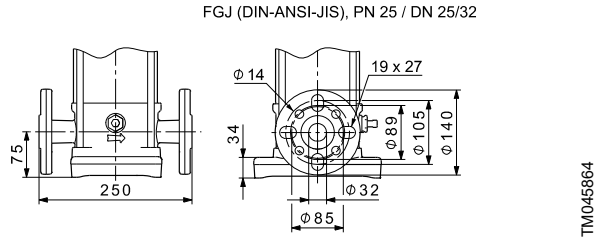

CRN feed pump

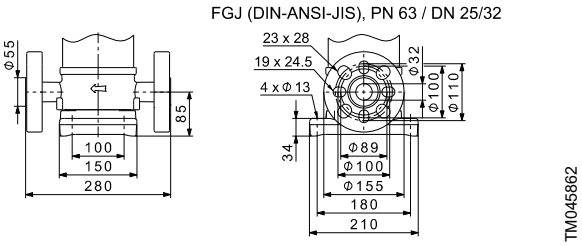

CRN-SF high-pressure pump

Dimensions and weights

Pump type	Motor P_2 [kW]	CRN/CRNE Dimensions [mm] PJE/CX B1	PJE/CX B1+B2	DIN flange B1	DIN flange B1+B2	D1	D2	D3	Net weight [kg] PJE/CX	Net weight [kg] DIN flange
CRN 5-5	1.5	360	641	385	666	178	110	-	29	33
CRN 5-7	2.2	414	735	439	760	178	110	-	34	38
CRN 5-9	2.2	468	789	493	814	178	110	-	35	39
CRN 5-12	3	554	889	579	914	198	120	-	42	47
CRN 5-14	4	608	980	633	1005	220	134	-	51	55
CRN 5-16	4	662	1034	687	1059	220	134	-	56	61
CRN 5-18	5.5	745	1136	770	1161	220	134	300	68	72

Pump type	Motor P_2 [kW]	CRN/CRNE								
		Dimensions [mm]							Net weight [kg]	
		PJE/CX		DIN flange		D1	D2	D3	PJE/CX	DIN flange
		B1	B1+B2	B1	B1+B2					
CRN 5-20	5.5	799	1190	824	1215	220	134	300	69	73
CRN 5-22	5.5	853	1244	878	1269	220	134	300	70	74
CRN 5-24	7.5	907	1286	932	1311	260	159	300	81	85
CRN 5-24 SF [17]	7.5	904	1283	904	1283	260	159	300	84	81
CRNE 5-24 SF	7.5	961	1350	992	1381	255	237	300	48	55

17) High-pressure pump.

CRN 10 SF, 60 Hz

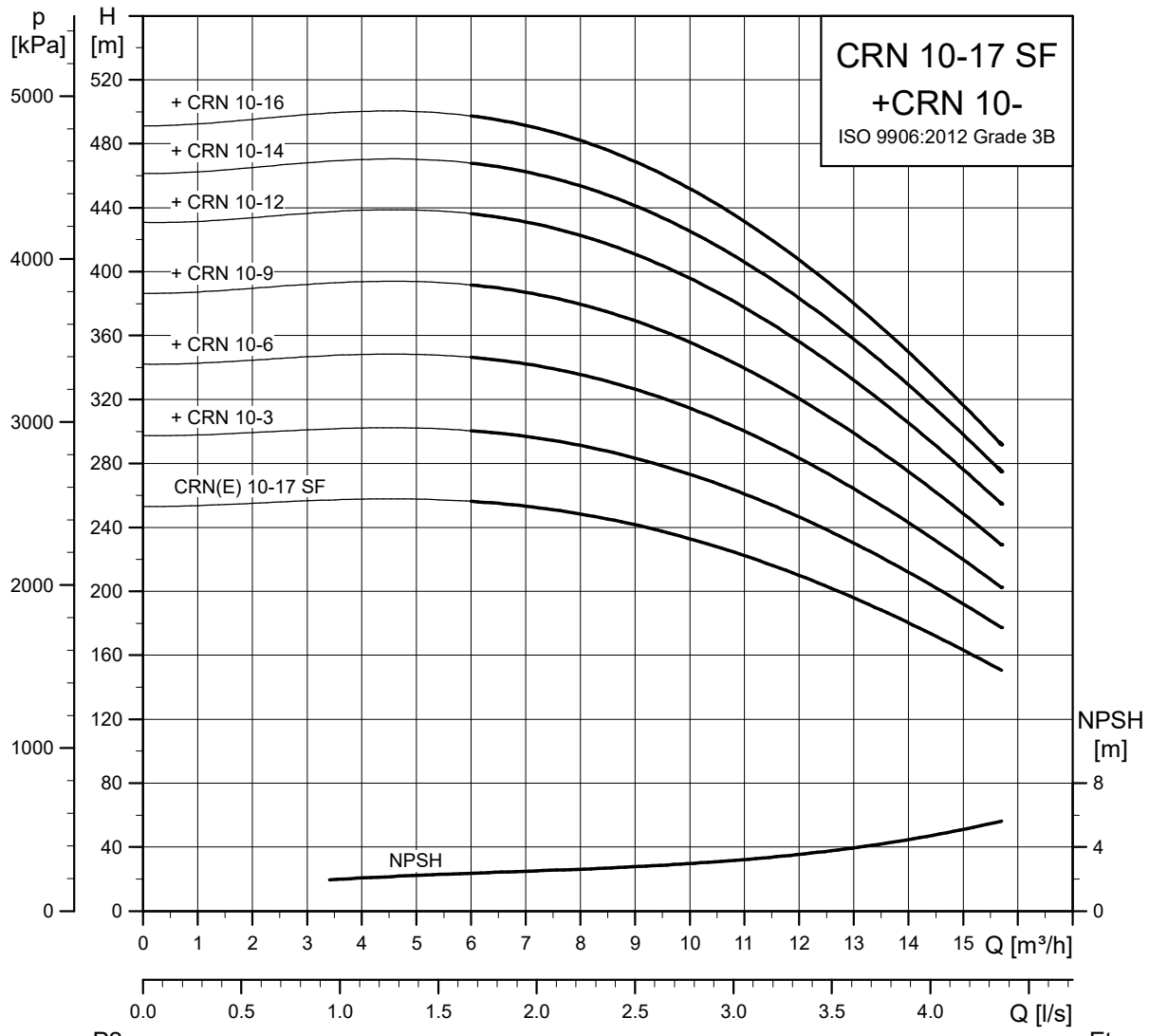

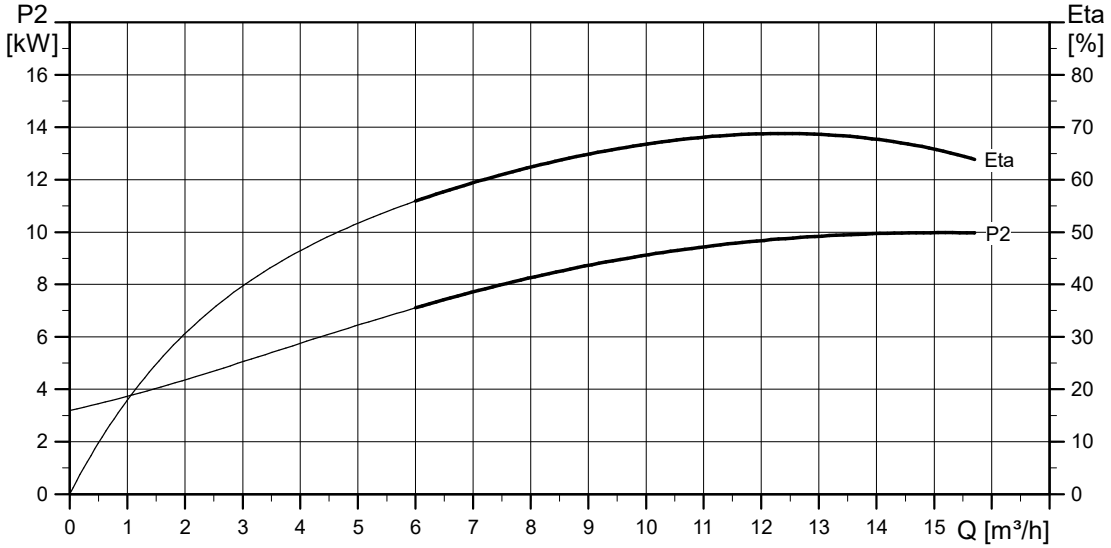

TM027354

Dimensional sketches

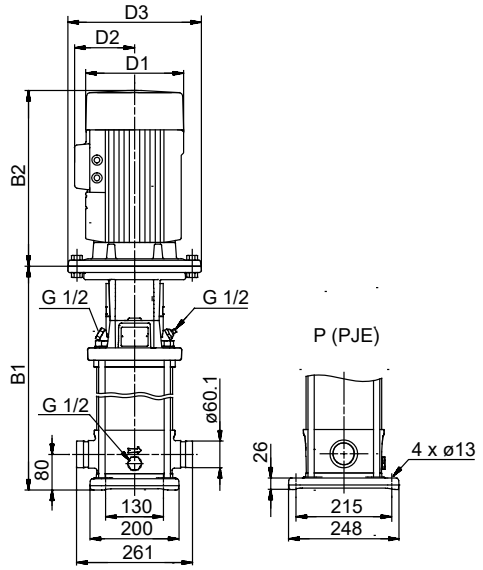

TM027378

CRN feed pump/CRN-SF high-pressure pump

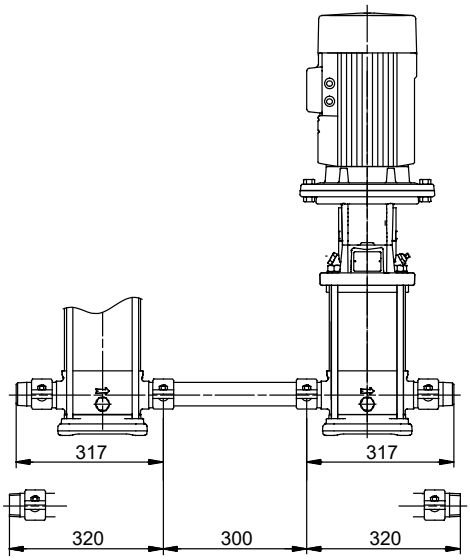

TM027381

CRN feed pump (left), connecting pipe (middle) and CRN SF high-pressure pump (right)

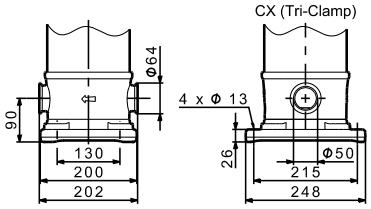

TM064978

CRN feed pump

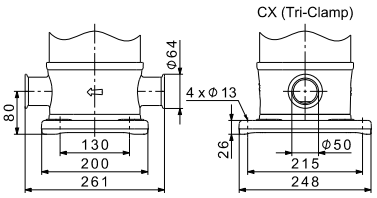

TM045860

CRN-SF high-pressure pump

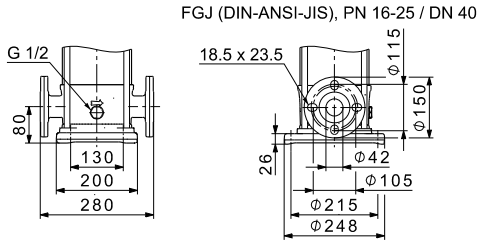

TM045865

CRN feed pump

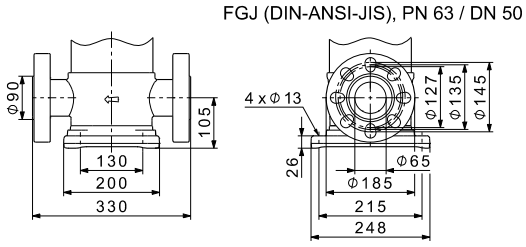

TM045863

CRN-SF high-pressure pump

Dimensions and weights

Pump type	Motor P_2 [kW]	CRN/CRNE Dimensions [mm] PJE/CX B1	PJE/CX B1+B2	DIN flange B1	DIN flange B1+B2	D1	D2	D3	Net weight [kg] PJE/CX	Net weight [kg] DIN flange
CRN 10-3	2.2	403	724	403	724	178	110	-	45	48
CRN 10-6	4	498	870	498	870	220	134	-	65	68
CRN 10-9	5.5	620	1011	620	1011	220	134	300	85	88
CRN 10-12	7.5	710	1089	710	1089	260	159	300	98	101
CRN 10-14	11	847	1329	847	1329	318	204	350	140	144
CRN 10-16	11	907	1389	907	1389	318	204	350	143	146
CRN 10-17 SF [18]	11	967	1449	967	1449	318	204	350	190	125
CRNE 10-17 SF	11	967	1373	1007	1413	255	237	350	73	73

[18] High-pressure pump.

CRN 15 SF, 60 Hz

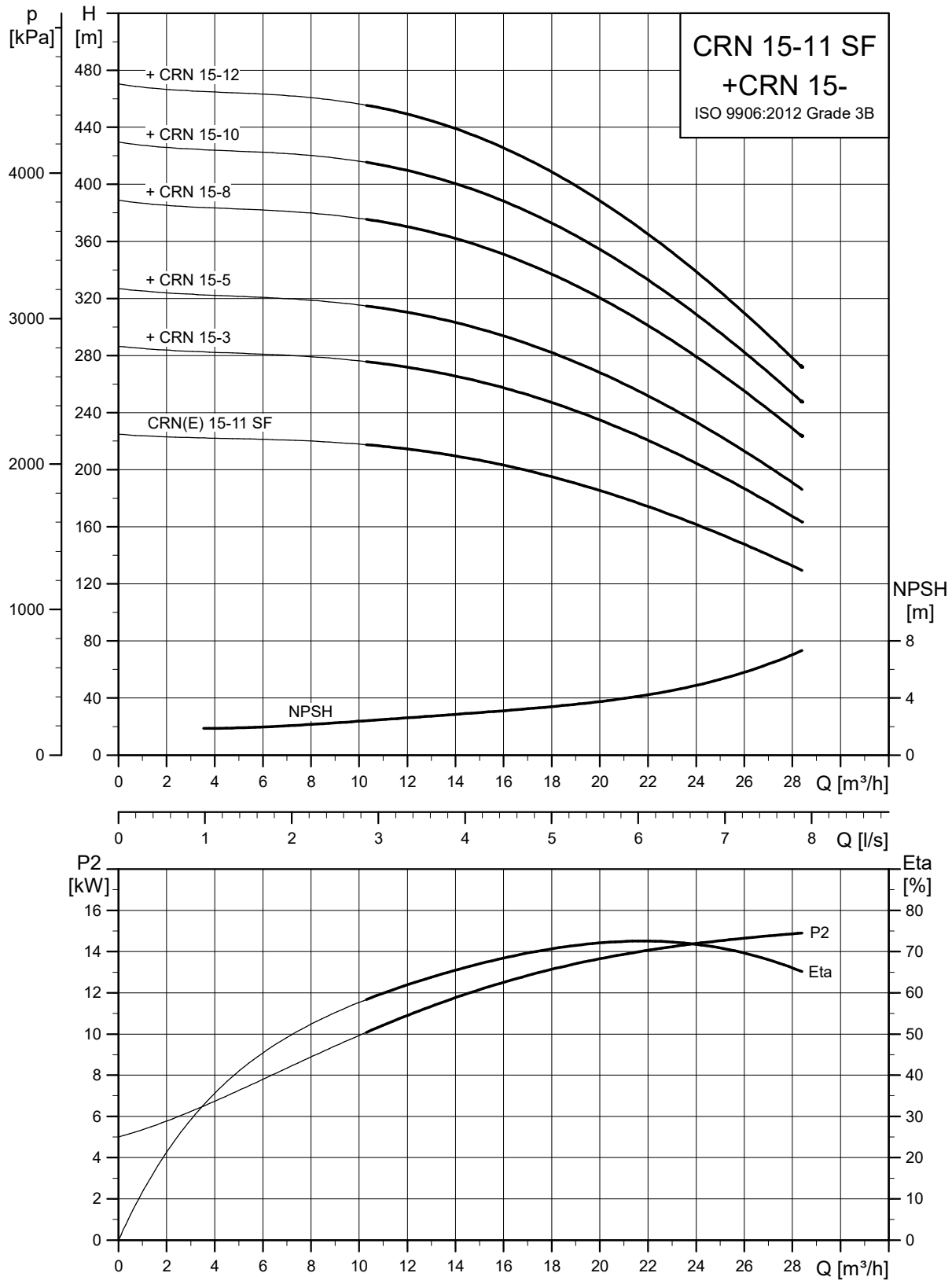

Dimensional sketches

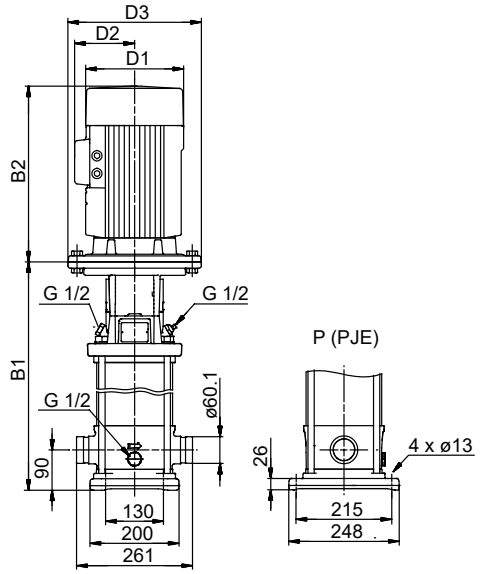

TM027380

CRN feed pump/CRN-SF high-pressure pump

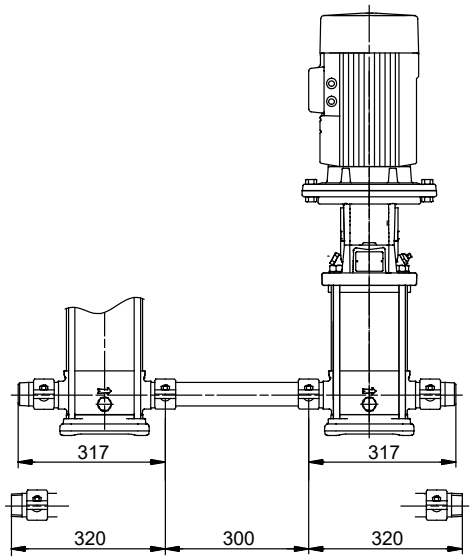

TM027381

CRN feed pump (left), connecting pipe (middle) and CRN SF high-pressure pump (right)

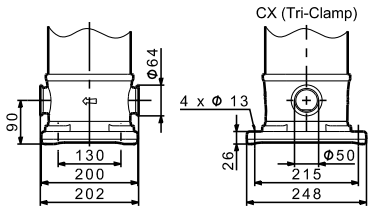

TM064978

CRN feed pump

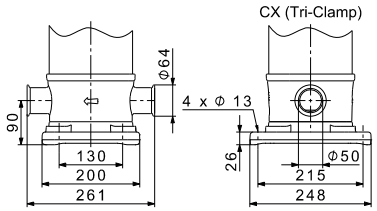

TM045861

CRN-SF high-pressure pump

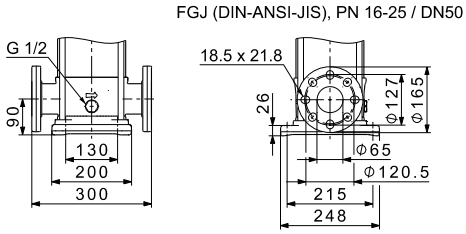

TM045866

CRN feed pump

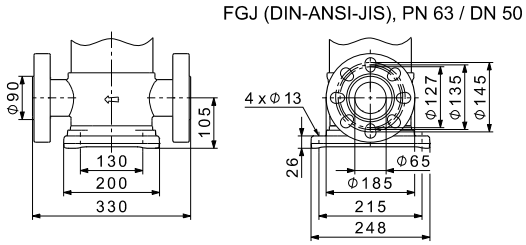

TM045863

CRN-SF high-pressure pump

Dimensions and weights

Pump type	Motor P_2 [kW]	CRN/CRNE								
		Dimensions [mm]							Net weight [kg]	
		PJE/CX		DIN flange		D1	D2	D3	PJE/CX	DIN flange
		B1	B1+B2	B1	B1+B2					
CRN 15-3	4	463	835	463	835	220	134	-	63	68
CRN 15-5	7.5	585	964	585	964	260	159	300	93	98
CRN 15-8	11	797	1279	797	1279	318	204	350	138	143
CRN 15-10	15	887	1369	887	1369	318	204	350	154	159
CRN 15-12	18.5	977	1503	977	1503	318	204	350	170	175
CRN 15-11 SF [19]	15	977	1459	977	1459	318	204	350	164	148
CRNE 15-11 SF	15	977	1448	1007	1489	314	308	350	204	214

[19] High-pressure pump.

CRN 20 SF, 60 Hz

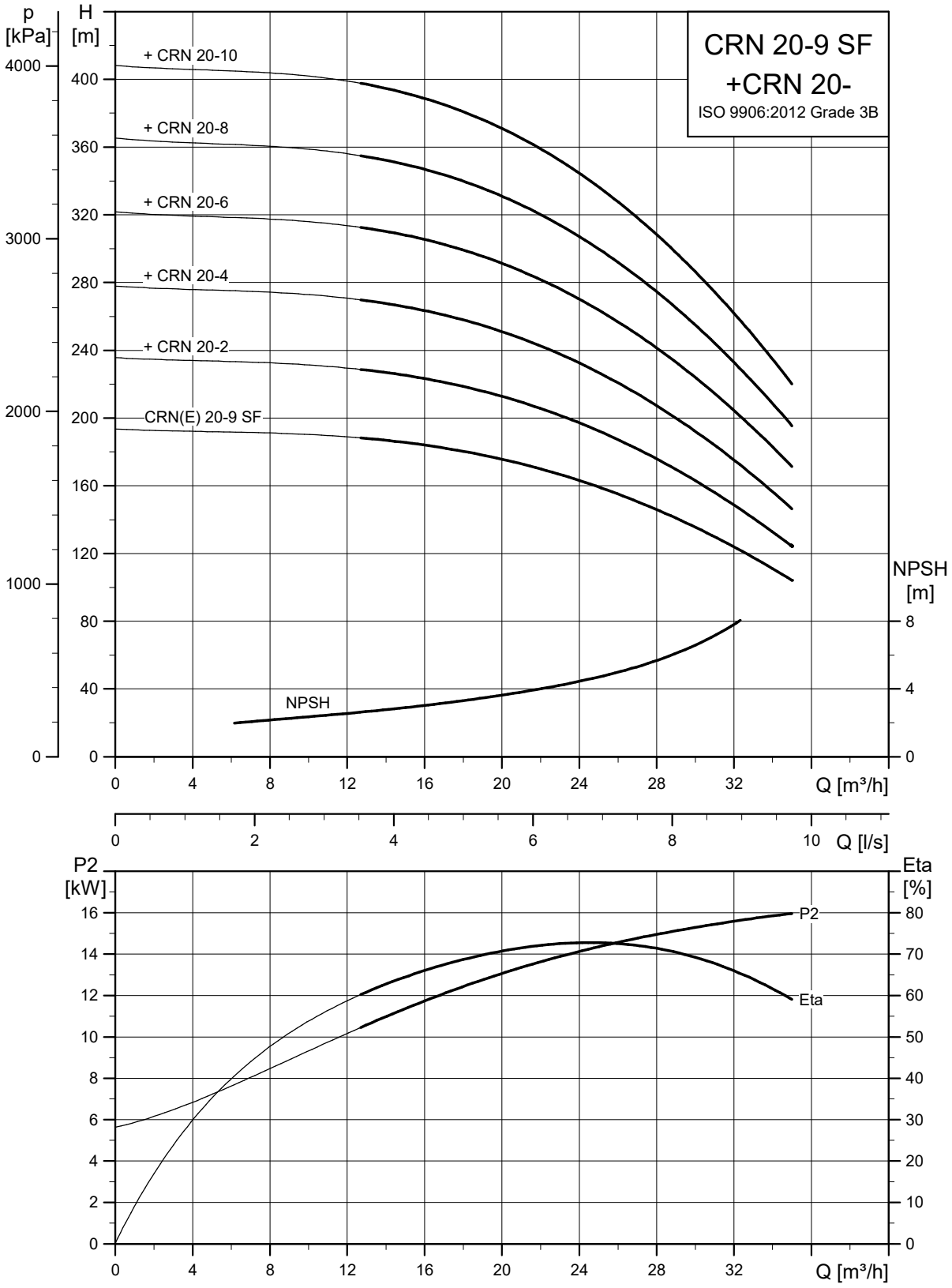

Dimensional sketches

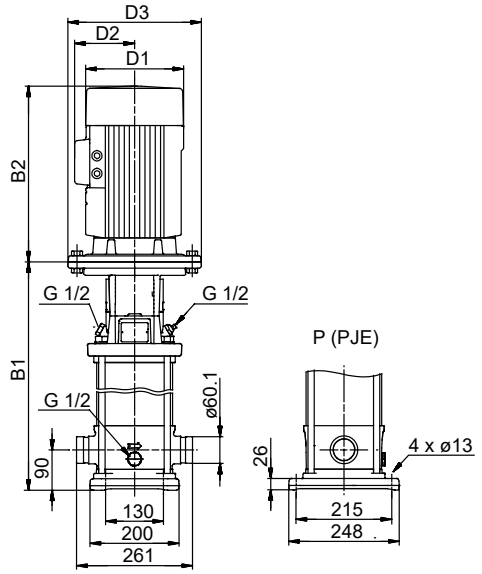

TM027380

CRN feed pump/CRN-SF high-pressure pump

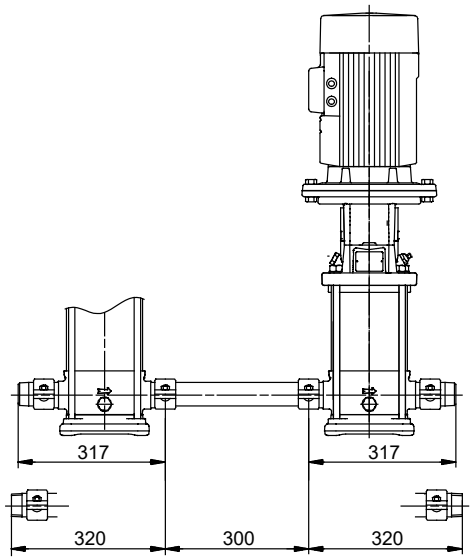

TM027381

CRN feed pump (left), connecting pipe (middle) and CRN SF high-pressure pump (right)

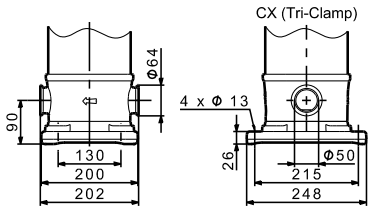

TM064978

CRN feed pump

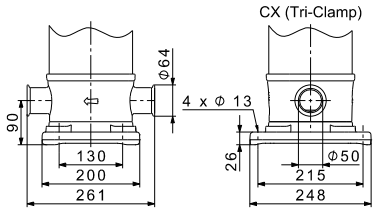

TM045861

CRN-SF high-pressure pump

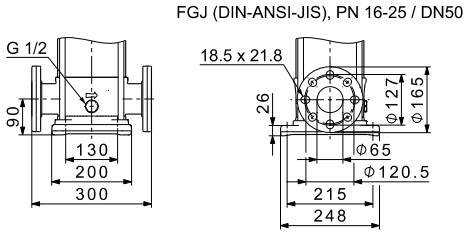

TM045866

CRN feed pump

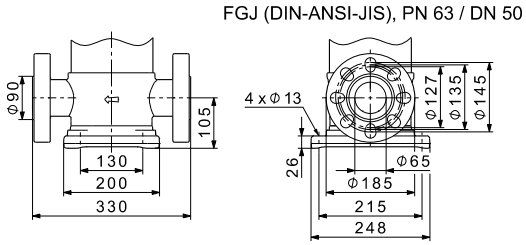

TM045863

CRN-SF high-pressure pump

Dimensions and weights

Pump type	Motor P_2 [kW]	CRN/CRNE								
		Dimensions [mm]							Net weight [kg]	
		PJE/CX		DIN flange		D1	D2	D3	PJE/CX	DIN flange
		B1	B1+B2	B1	B1+B2					
CRN 20-2	4	418	790	418	790	220	134	-	62	67
CRN 20-4	7.5	540	919	540	919	260	159	300	91	96
CRN 20-6	11	707	1189	707	1189	318	204	350	135	140
CRN 20-8	15	797	1279	797	1279	318	204	350	150	155
CRN 20-10	18.5	887	1413	887	1413	318	204	350	167	171
CRN 20-9 SF [20]	18.5	887	1413	887	1413	318	204	350	136	148
CRNE 20-9 SF	18.5	1217	1743	1232	1758	314	308	350	226	236

[20] High-pressure pump.

CRN 32 SF, 60 Hz

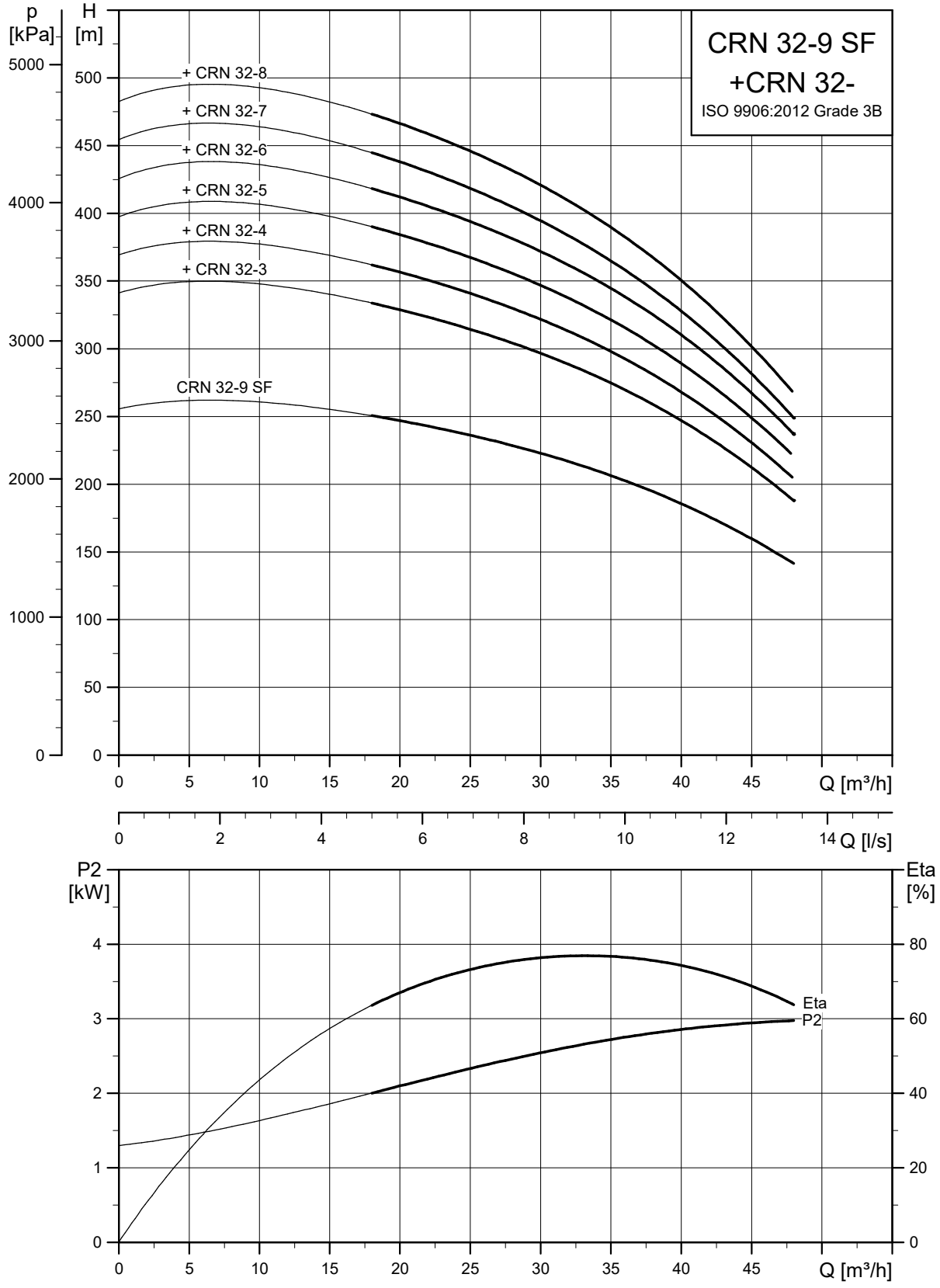

Dimensional sketches

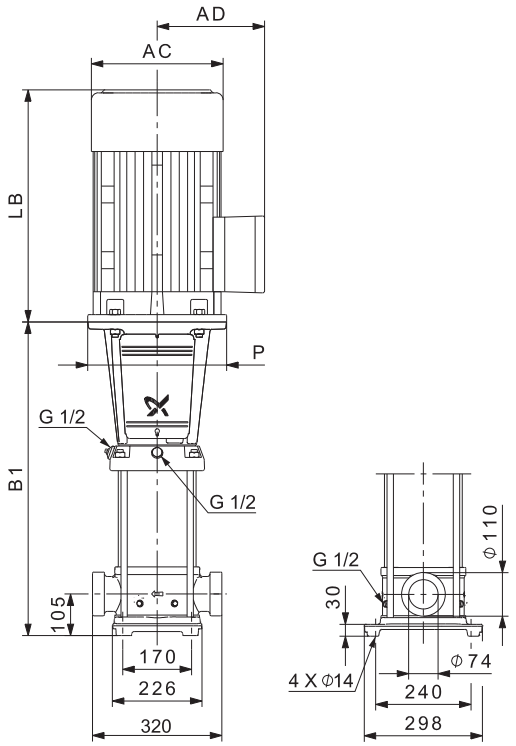

TM057216

CRN feed pump/CRN high-pressure pump

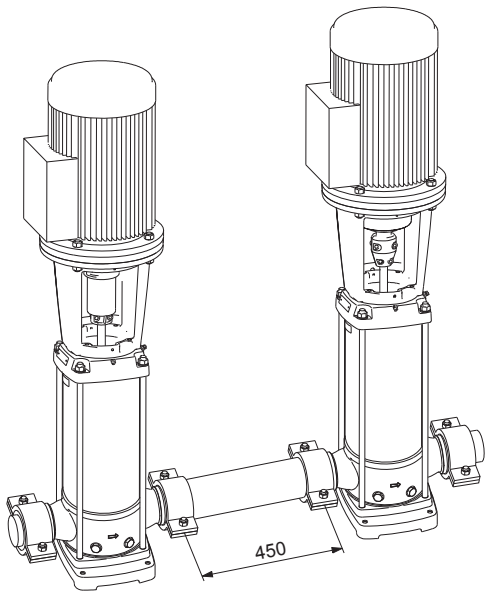

TM053426

CRN feed pump, connecting pipe and CRN high-pressure pump

Dimensions and weights

Pump type	Motor P_2 [kW]	Dimensions [mm]					Net weight [kg]
		B1	B1+B2	D1	D2	D3	
CRN 32-3	11	755	1237	318	204	350	154
CRN 32-4	15	825	1307	318	204	350	169
CRN 32-5	18.5	895	1421	318	204	350	185
CRN 32-6	18.5	965	1491	318	204	350	188
CRN 32-7	22	1035	1587	318	204	350	206
CRN 32-8	30	1105	1716	396	315	400	314
CRN 32-9 SF [21]	30	1245	1856	407	315	400	323

[21] High-pressure pump.

CRN 45 SF, 60 Hz

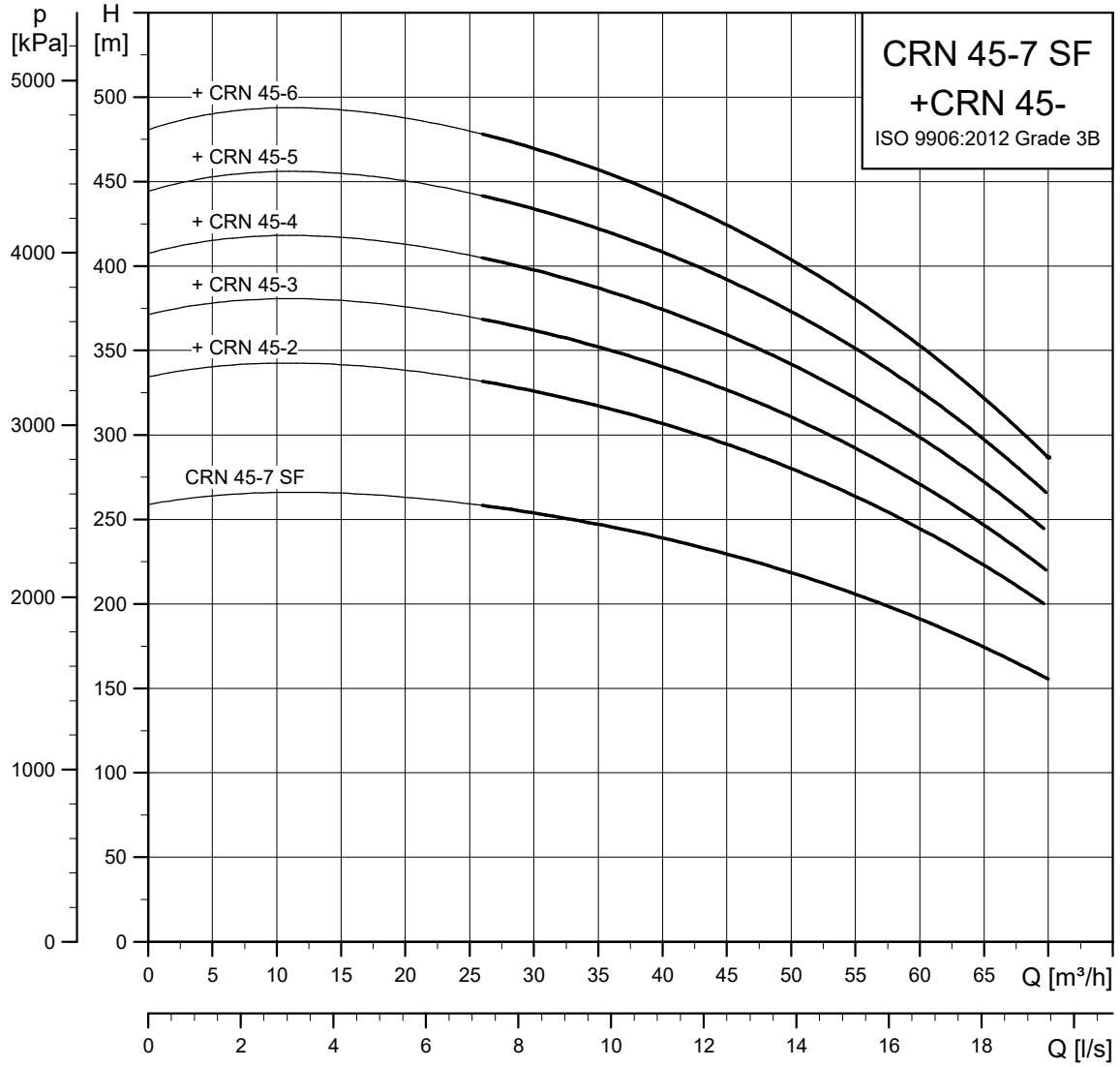

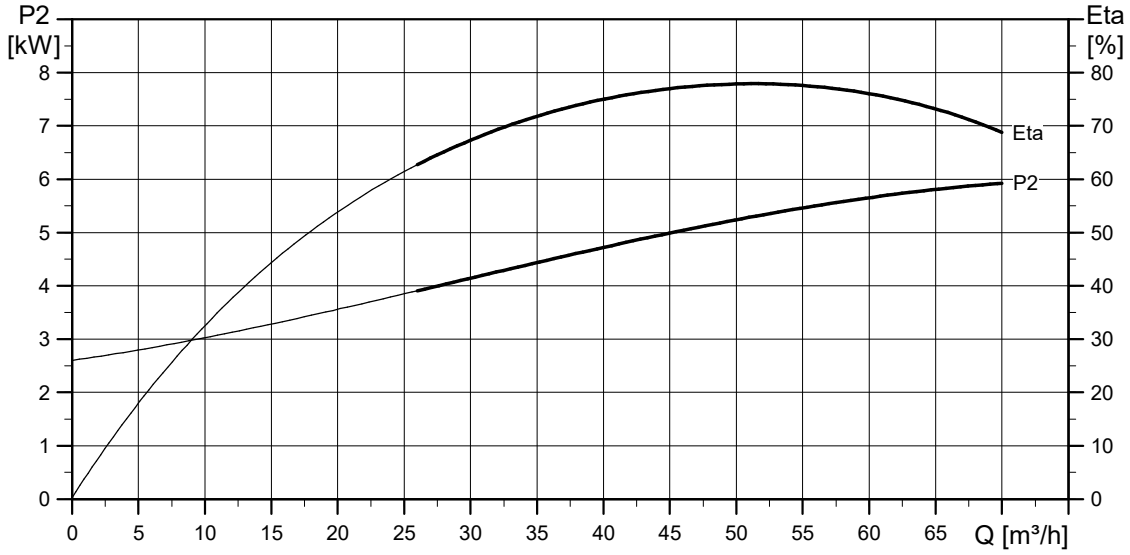

TM021684

Dimensional sketches

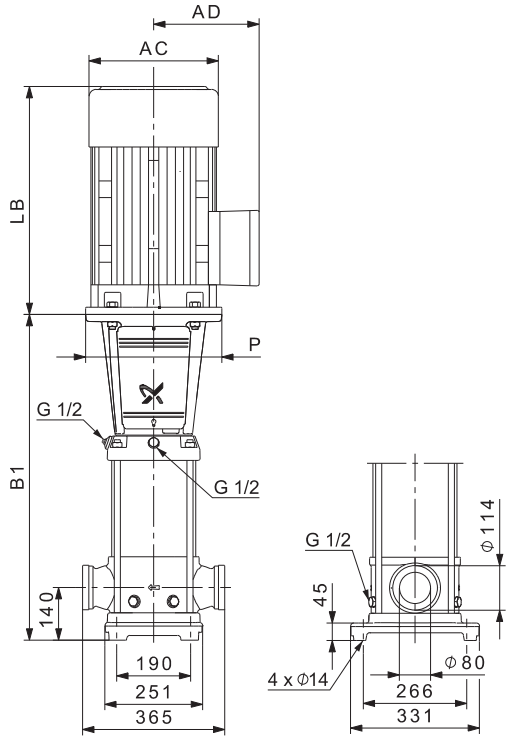

TM057217

CRN feed pump/CRN high-pressure pump

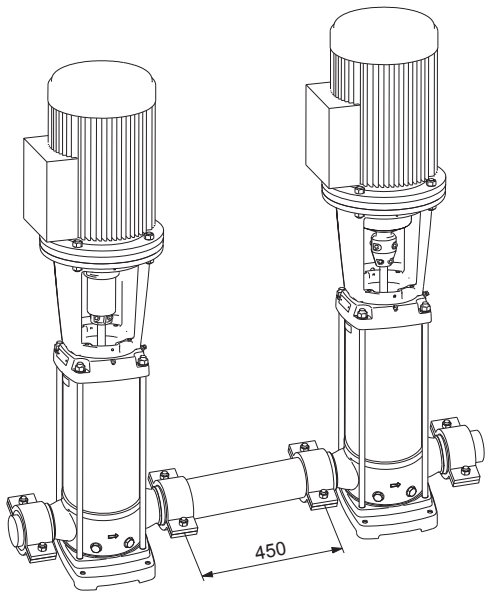

TM053426

CRN feed pump, connecting pipe and CRN high-pressure pump

Dimensions and weights

Pump type	Motor P_2 [kW]	Dimensions [mm]					Net weight [kg]
		B1	B1+B2	D1	D2	D3	
CRN 45-2	15	749	1231	318	204	350	171
CRN 45-3	18.5	829	1355	318	204	350	188
CRN 45-4	30	909	1520	396	315	400	309
CRN 45-5	30	989	1600	396	315	400	313
CRN 45-6	37	1069	1705	396	315	400	345
CRN 45-7 SF [22)]	45	1229	1937	449	338	450	438

22) High-pressure pump.

CRN 64 SF, 60 Hz

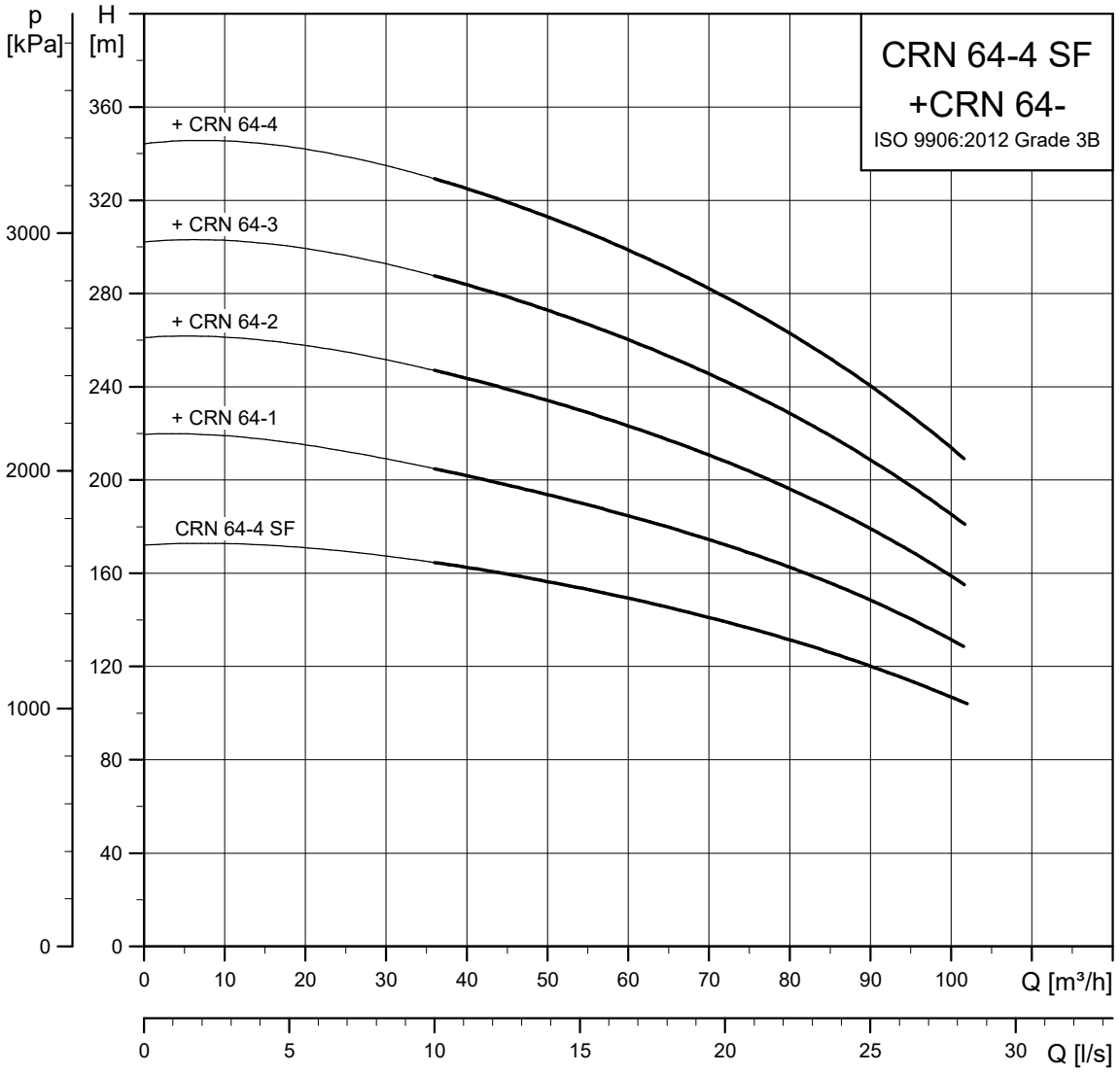

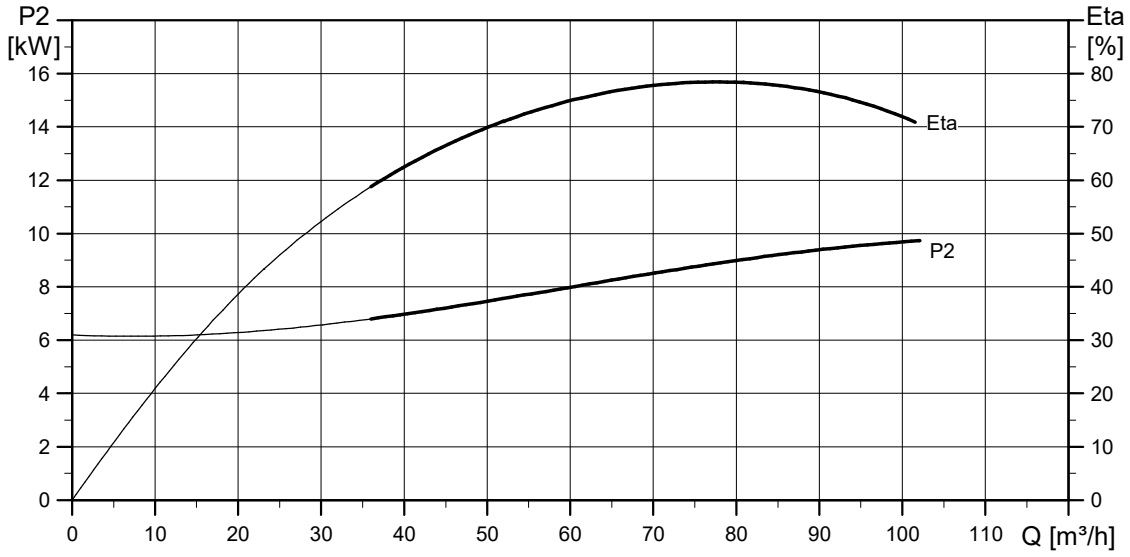

TM021685

Dimensional sketches

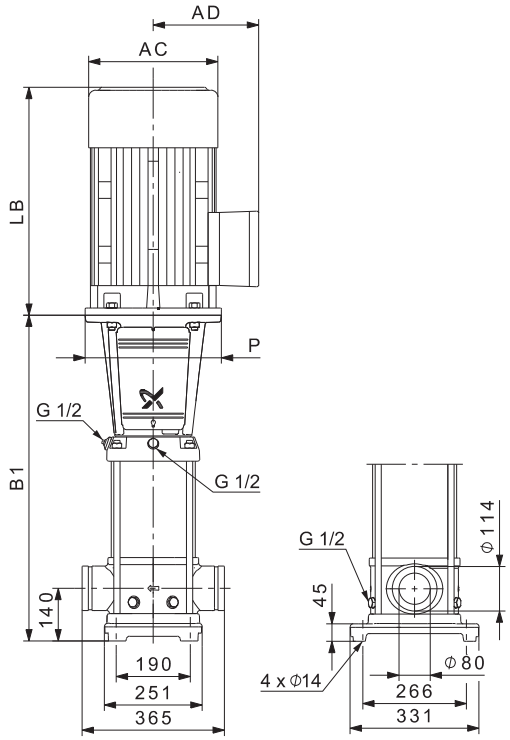

TM057218

CRN feed pump/CRN high-pressure pump

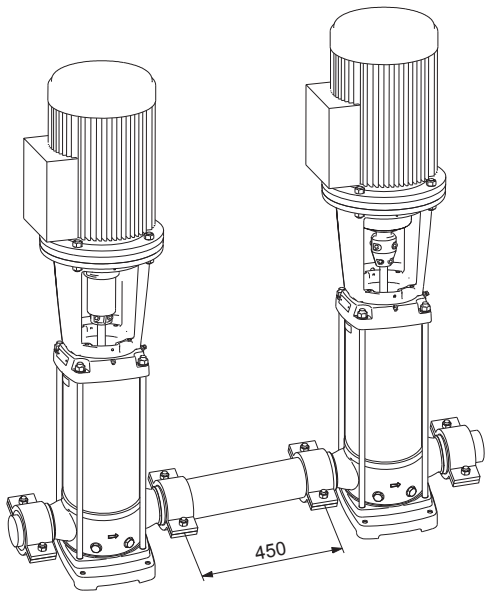

TM053426

CRN feed pump, connecting pipe and CRN high-pressure pump

Dimensions and weights

Pump type	Motor P_2 [kW]	Dimensions [mm]					Net weight [kg]
		B1	B1+B2	D1	D2	D3	
CRN 64-1	11	671	1153	318	204	350	158
CRN 64-2	22	754	1306	318	204	350	202
CRN 64-3	30	836	1447	396	315	400	309
CRN 64-4	45	919	1627	449	338	450	430
CRN 64-4 SF [23]	45	1166	1874	449	338	450	429

[23] High-pressure pump.

7. Motor data

Standard motors for CRN, CRN-SF, 50 Hz

MG

TM031711

Motor P2 [kW]	Frame size	Standard voltage [V]	Full-load current $I_{1/1}$ [A]	Power factor Cos $\varphi_{1/1}$	Efficiency class	Motor eff. η [%]	Starting current I_{start} [%]	Speed [rpm]
0.37 [24]	71A	220-240Δ/380-415Y	1.74 / 1.00	0.80 - 0.70	IE3	73.8	490-530	2850-2880
0.55 [24]	71B	220-240Δ/380-415Y	2.50 / 1.44	0.80 - 0.70	IE3	77.8	580-620	2830-2850
0.75 [24]	80A	220-240Δ/380-415Y	3.30 / 1.90	0.81 - 0.71	IE3	80.7	580-620	2840-2870
1.1 [24]	80C	220-240Δ/380-415Y	4.35 / 2.50	0.83 - 0.76	IE3	82.7	450-500	2840-2870
1.5 [24]	90SD	220-240Δ/380-415Y	5.70 / 3.30	0.84 - 0.78	IE3	84.2	750-820	2890-2910
2.2 [24]	90LE	380-415Δ	4.65	0.86 - 0.80	IE3	85.9	840-920	2890-2910
3 [24]	100LC	380-415Δ	6.30	0.87 - 0.82	IE3	87.1	840-920	2900-2920
4 [25]	112MC	380-415Δ	7.90	0.87	IE3	88.1	1000	2920-2940
5.5 [25]	132SC	380-415Δ	11.00	0.87 - 0.82	IE3	89.2	1080-1180	2920-2940
7.5 [25]	132SB	380-415Δ/660-690Y	14.4 - 14 / 8.3 - 8.1	0.88 - 0.82	IE3	90.1	780-910	2910-2920
11 [25]	160MB	380-415Δ/660-690Y	20.8 - 19.8 / 12 - 11.8	0.88 - 0.84	IE3	91.2	660-780	2940-2950
15 [25]	160MD	380-415Δ/660-690Y	28-26 / 16.2 - 15.6	0.89 - 0.87	IE3	91.9	660-780	2930-2950
18.5 [25]	160LB	380-415Δ/660-690Y	34.5 - 32.5 / 20 - 18.8	0.89 - 0.85	IE3	92.4	830-980	2940-2950
22 [25]	180MB	380-415Δ/660-690Y	39.5 / 22.8	0.90	IE3	92.7	830	2950

Siemens

TM031710

30 [25]	200L	380-420Δ/660-725Y	53-51 / 31 - 29.5	0.87	IE3	93.3	700	2955
37 [25]	200L	380-420Δ/660-725Y	65-63 / 37.5 - 36	0.88	IE3	93.7	710	2955
45 [25]	225M	380-420Δ/660-725Y	78-74 / 45-43	0.89	IE3	94.0	690	2960

[24] Deep-groove ball bearings.

[25] Angular contact bearing mounted in drive end.

Standard motors for CRN, CRN-SF, 60 Hz

MG

TM031711

Motor P2 [kW]	Frame size	Standard voltage [V]	Full-load current $I_{1/1}$ [A]	Power factor Cos $\varphi_{1/1}$	Efficiency class	Motor eff. η [%]	Starting current I_{start} [%]	Speed [rpm]
0.37	71A	220-255Δ/380-440Y	1.50 - 1.44 / 0.87 - 0.83	0.85 - 0.76	IE3	73.4	550-650	3410-3470
0.55	71B	220-255Δ/380-440Y	2.15 - 2.05 / 1.25 - 1.20	0.85 - 0.76	IE3	76.8	500-600	3390-3460
0.75	80A	220-255Δ/380-440Y	2.95 - 2.75 / 1.70 - 1.60	0.86 - 0.77	IE3	77.0	600-740	3410-3470
1.1	80C	230-255Δ/400-440Y	4.10 - 4.00 / 2.38 - 2.30	0.86 - 0.80	IE3	84.0 - 84.0	440-500	3430-3470
1.5	90SD	230-277Δ/400-480Y	5.30 - 5.00 / 3.05 - 2.90	0.85 - 0.75	IE3	85.5	780-980	3480-3530
2.2	90LE	400-480Δ	4.30 - 4.00	0.88 - 0.80	IE3	86.5	730-1050	3480-3530
3	100LC	400-480Δ	6.00 - 5.40	0.90 - 0.84	IE3	88.5 - 88.5	910-1100	3490-3530
4	112MC	380-480Δ	7.80 - 6.80	0.91 - 0.82	IE3	88.5	1000-1470	3510-3540
5.5	132SC	380-480Δ	10.6 - 9.30	0.90 - 0.80	IE3	89.5	1020-1480	3510-3550
7.5	132SB	400-480Δ/690Y	13.8 - 12 / 8.1	0.88 - 0.82	IE3	90.2 - 90.2	750-1050	3500-3530
11	160MB	400-480Δ/690Y	20.1 - 17.2 / 11.6	0.88 - 0.83	IE3	91.0 - 91.0	640-890	3530-3550
15	160MD	400-480Δ/690Y	26.9 - 22.4 / 15.6	0.89 - 0.86	IE3	91.0 - 91.0	640-890	3530-3550
18.5	160LB	400-480Δ/690Y	33.2 - 28 / 16.6	0.88 - 0.84	IE3	91.7 - 91.7	760-1100	3530-3560
22	180MB	380-480Δ/660-690Y	40 - 32.5 / 23 - 22.2	0.91	IE3	91.7	650	3520-3560

Siemens

TM031710

30 [26]	200L	440-480Δ	47-29	0.87	IE3	92.4	850	3560
37 [26]	200L	440-480Δ	57-35	0.88	IE3	93.0	760	3560
45 [26]	225M	440-480Δ	69-43	0.88	IE3	93.6	760	3570
55 [26]	250M	440-480Δ	83-52	0.89	IE3	93.6	730	3578

[26] Siemens motors operating at 440-480Δ voltage may be loaded with a service factor of 1.15.

E-motors for CRNE-HS, 50/60 Hz

MGE

TM069830

Motor P2 [kW]	Frame size	Phase s	Standard voltage [V]	Full-load current $I_{1/1}$ [A]	Power factor Cos $\varphi_{1/1}$	Efficiency class	Motor eff. η [%]	Speed [rpm]
4.6	112MC	3	380-500Δ	8.6 - 6.9	0.92 - 0.88	IE5	90.7	480-5900
6	132SE	3	380-500Δ	11.5 - 9.0	0.92 - 0.89	IE5	90.5	480-5900
7.5	132SF	3	380-500Δ	14.2 - 11.3	0.93 - 0.89	IE5	90.9	480-5900

E-motors for CRNE-SF

Motor P2 [kW]	Frame size	Phases	Standard voltage [V]	$I_{1/1}$ [A]	Cos $\varphi_{1/1}$	η [%]
4.0	112	3	380-500	7.6 - 6.2	0.92 - 0.87	92.2
7.5	132	3	380-500	14.1 - 11.2	0.93 - 0.89	92.5
11	160	3	380-500	20.3 - 16	0.93 - 0.90	93.1
15	160	3	380-480	30 - 26	0.91 - 0.86	91.9
18.5	160	3	380-480	37 - 31	0.91 - 0.88	92.4

MGE

TM069830

8. Accessories

PJE couplings

Sets with and without pipe stubs as well as a connecting pipe between a feed pump and high-pressure pump are available as accessories for pumps with PJE (Victaulic) couplings.

PJE couplings with pipe stub

Materials in contact with the pumped liquid are made of stainless steel EN 1.4401 (AISI 316) and rubber.

A set consists of two coupling halves (Victaulic type 77), one gasket, one pipe stud (for welding or threaded), bolts and nuts.

Coupling	Pump type	Pipe stub	PN [bar]	A	B	Pipe connection	Rubber parts	Number of coupling sets required	Product number
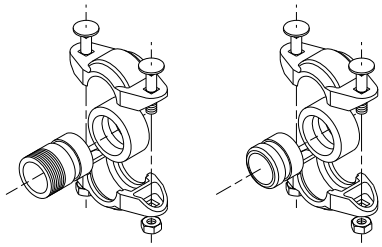 TM003808	**CRNE-HS 1** **CRNE-HS 3** **CRN 3-SF** **CRN 5-SF**	Threaded	80	50	320	R 1 1/4	EPDM	2	419911
							FKM	2	419905
		For welding	80	50	280	DN 32	EPDM	2	419912
							FKM	2	419904
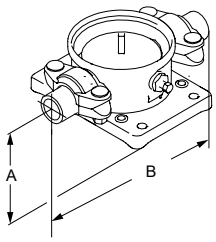 TM081704	**CRN 10-SF** **CRN 15-SF** **CRN 20-SF**	Threaded	70	80	377	R 2	EPDM	2	339911
							FKM	2	339918
		For welding	70	80	371	DN 50	EPDM	2	339910
							FKM	2	339917
	CRN 32-SF	For welding	70	105	422	DN 80	EPDM	2	98144746
							FKM	2	98144749
	CRN 45-SF	For welding	70	140	467	DN 100	EPDM	2	98144752
							FKM	2	98144755
	CRN 64-SF	For welding	70	140	467	DN 100	EPDM	2	98144752
							FKM	2	98144755
	CRN 90-SF	For welding	70	140	482	DN 100	EPDM	2	98144752
							FKM	2	98144755

PJE coupling without pipe stub

A set consists of one coupling, one gasket, bolts and nuts.

Pump type	Pipe connection	Product number	
		EPDM	FKM
CRN 3 SF **CRN 5 SF**	DN 32	ID1781	ID6742
CRN 10 SF **CRN 15 SF** **CRN 20 SF**	DN 50	ID2643	ID6743
CRN 32 SF	DN 80	ID5530	ID8311
CRN 45 SF **CRN 64 SF** **CRN 90 SF**	DN 100	96483370	96428783

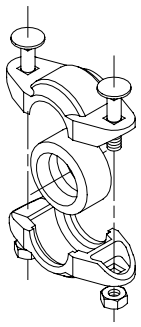

TM016505

PJE coupling

Connecting pipe

Pump type	Pipe connection	Product number
CRN 3 SF **CRN 5 SF**	DN 32	400132
CRN 10 SF **CRN 15 SF** **CRN 20 SF**	DN 50	420138
CRN 32 SF	DN 80	98144757
CRN 45 SF **CRN 64 SF** **CRN 90 SF**	DN 100	98144759

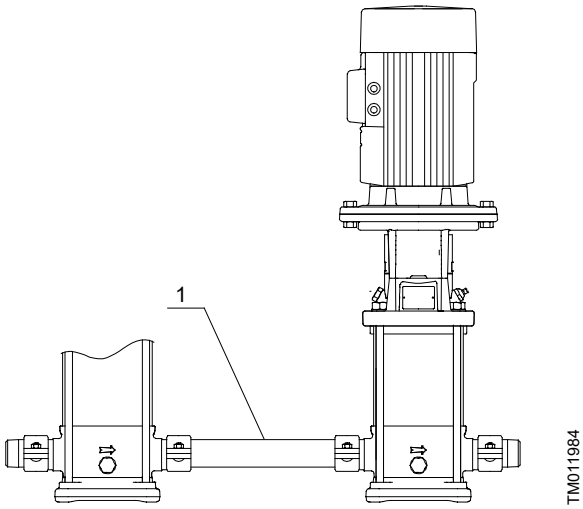

CRN feed pump (left), connecting pipe (1) and CRN SF high-pressure pump (right).

Flange connections

Counter flanges, an adapter kit and support blocks are available as accessories for pumps with flange connections.

Counterflanges

A counterflange set consists of one counter flange, one gasket, bolts and nuts.
Counterflanges for CRN pumps are made of stainless steel (EN 1.4401/AISI 316).

Pump type	Counter flange	Description	Rated pressure	Pipe connection	Product number
CRN 3 SF CRN 5 SF	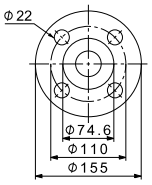	For welding	63 bar, EN 1092-1	32 mm, nominal	97504185
CRN 10 SF CRN 15 SF CRN 20 SF	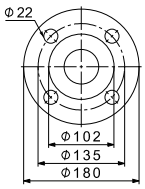	For welding	63 bar, EN 1092-1	50 mm, nominal	97504183

Support blocks

The vertical height from the bottom of the base to the centre of the connection port is higher on CRNE-HS, CRN-SF and CRNE-SF pumps with flange connections than on standard CRN pumps.

When a CRN-SF pump (high-pressure pump) is connected to a standard CRN pump (feed pump), the difference in height will cause a misalignment. The misalignment can be eliminated by fitting support blocks to the standard pump.

The following support blocks are available as accessories.

Pump type	Height of support blocks [mm]	Product number
CRN 3 SF **CRN 5 SF**	10	97528978
CRN 10 SF	25	97528980
CRN 15 SF **CRN 20 SF**	15	97529002

Tri-Clamp connections

Sets with pipe stubs are available as accessories for pumps with Tri-Clamp connections. A set consists of one clamping ring, one pipe stub and one gasket.

Clamping ring

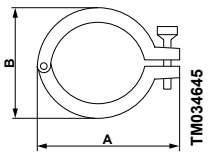

Pipe stub

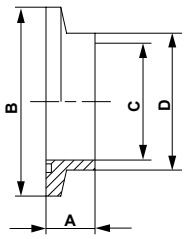

Gasket

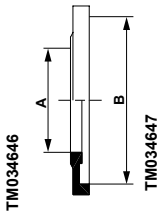

Pump type	Nominal diameter [mm]	A [mm]	B [mm]	A [mm]	B [mm]	C [mm]	D [mm]	A [mm]	B [mm]	Number of connection sets required	Product number
CRNE 1, 3 HS **CRN, CRNE 1, 3, 5 SF**	32	102	60	21.5	50.5	32	36	32.2	50.5	2	97549395
CRN, CRNE 10, 15, 20 SF	50	123	75	21.5	65	50	54	50.2	64	2	97549397

Pressure sensors for CRNE-HS

Danfoss pressure-sensor kit, consisting of the following:

- Danfoss pressure transmitter, type MBS3000, with 2 m screened cable. Connection: G 1/2 A (DIN 16288 - B6kt)
- 5 cable clips (black)
- Instruction manual PT (00400212).

Pressure range [bar]	Temperature range [°C]	Product number
0-40	-40 to +85	96483573
0-60		96483574

LiqTec

The LiqTec dry-running protection unit protects the pump and process against dry running and temperatures exceeding 130 ± 5 °C. Connected to the motor PTC sensor, LiqTec also monitors the motor temperature.

LiqTec is prepared for DIN rail mounting in control cabinets.

Enclosure class: IPX0.

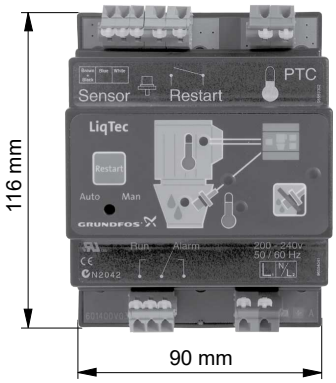

TM032108

Pump type	Voltage [V]	LiqTec	Sensor 1/2"	Cable 5 m	Extension cable 15 m	Product number
CR CRI CRN	200-240	●	●	●	-	96556429
	80-130	●	●	●	-	96556430
	-	-	-	-	●	96443676

● Available.

- Not available.

9. Grundfos Product Center

Online search and sizing tool to help you make the right choice.
From the international view, you can select your specific country to view the product range available to you.
International view: *https://product-selection.grundfos.com*

All the information you need in one place

Performance curves, technical specifications, pictures, dimensional drawings, motor curves, wiring diagrams, spare parts, service kits, 3D drawings, documents, system parts. The Product Center displays any recent and saved items - including complete projects - right on the main page.

Downloads

On the product pages, you can download installation and operating instructions, data booklets, service instructions, etc., in PDF format.

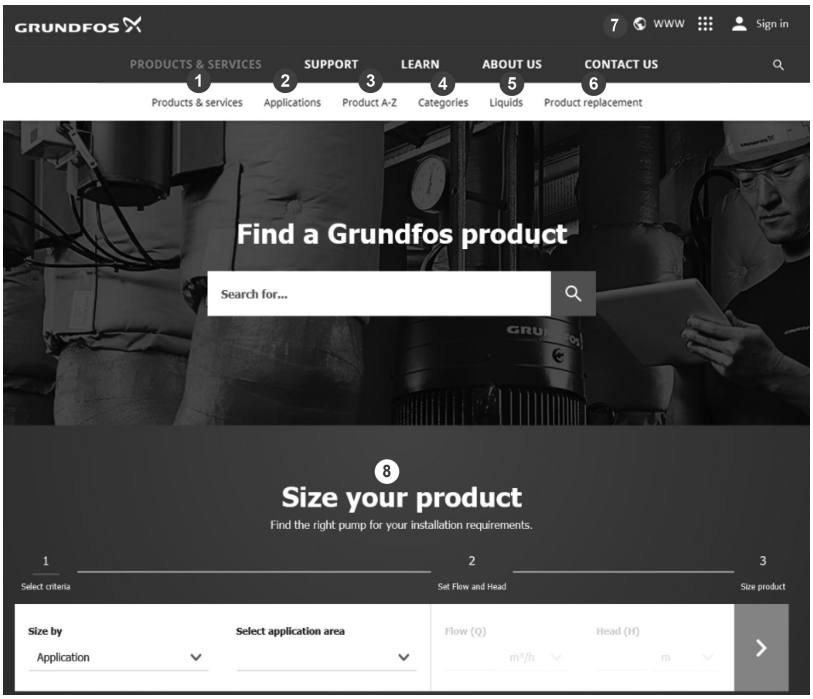

When you select your country, you will see the menus below. Note that some menus may not be available depending on the country.
Example: *https://product-selection.grundfos.com/uk*

Pos.	Description
1	**Products & services** enables you to find products and documents by typing a product number or name into the search field.
2	**Applications** enables you to choose an application to see how Grundfos can help you design and optimise your system.
3	**Products A-Z** enables you to look through a list of all the Grundfos products.
4	**Categories** enables you to look for a product category.
5	**Liquids** enables you to find pumps designed for aggressive, flammable or other special liquids.
6	**Product replacement** enables you to find a suitable replacement.
7	**WWW** enables you to select the country, which changes the language, the available product range and the structure of the website.
8	**Sizing** enables you to size a product based on your application and operating conditions.

10. Document quality feedback

To provide feedback about this document, scan the QR code using your phone's camera or a QR code app.

FEEDBACKV7174003

Click here to submit your feedback

V7174003 **02.2023**
ECM: 1352991

GRUNDFOS Holding A/S
Poul Due Jensens Vej 7
DK-8850 Bjerringbro
Tel: +45 87 50 14 00
www.grundfos.com

GRUNDFOS