42. MGE model H/I

MGE 71, MGE 80, MGE 90
50/60 Hz

Antenna, external

Pos.	Description / Kit No	98271482
291	Antenna with cable gland	1

Bearing

Description	Type	kit No
Ball bearing	6204 + 6204	98330603
	6304 + 6204	98330604
	6305 + 6204	98330605
	6306 + 6204	98330606
Hybrid ball bearing	6204 + 6204	98330608
	6304 + 6204	98330609
	6305 + 6204	98330610
	6306 + 6204	98330611

Content

Pos.	Description	Quantity
153	Drive end	1
154	Non-drive end	1
156d	Gasket	1
156c	Seal ring for drive end and non-drive end	2
158	Corrugated spring washer	1
158a	O-ring	1

Blanking plug

Pos.	Description / Kit No	98334761
-	Blanking plug	4

Cable glands

Pos.	Description	Kit No
293	1 x D7-14 & 2 x D5	98337336
	1 x D7-14 & 4 x D5	98337337
	1 x D7-14 & 6 x D5	98337338
	10 x D7-14	98337339
	10 x D5 single entry	98337340
	10 x D5 double entry	98337341

Cable glands, adapter

Pos.	Description	Kit No
252a	1/2" & 3/4" NPT & Gland D7-14	98345796

Connector

Pos.	Description	Kit No
266	Connector set	98403113

Control box, complete

Note: all motorers are delivered without CIM modul.

Functional module	Description: Control panel	Description: Power board	Kit No
FM200	HMI100	PB111	98406660
		PB121	98406661
		PB311	98406664
		PB321	98406665
	HMI200	PB111	98406627
		PB121	98406628
		PB311	98406651
		PB321	98406652
FM300	HMI200	PB111	98406653
		PB113	98406655
		PB121	98406654
		PB123	98406657
		PB311	98406658
		PB321	98406659

Control box, lower part with power board

Description		Kit No
1 x 90-240 VAC / 30-300 VDC		
PB113	**(0.25 - 0.75 kW)**	**98330612**
PB123	**(1.1 - 1.5 kW)**	**98330613**
1 x 200-240 VAC		
PB111	**(0.25 - 0.75 kW)**	**98330614**
PB121	**(1.1 - 1.5 kW)**	**98330615**
PB112	**(0.25 - 0.75 kW IT)**	**98330616**
PB122	**(1.1 - 1.5 kW IT)**	**98330617**
3 x 380-500 VAC		
PB311	**(0.25 - 1.1 kW)**	**98330618**
PB321	**(1.5 - 2.2 kW)**	**98330619**
PB312	**(0.25 - 1.1 kW IT)**	**98330620**
PB322	(1.5 - 2.2 kW IT)	98330621

Content

Pos.	Description	Quantity
178	Screw	4
251	Power board	1
275a	Pin header	1
277	Isolation cover	1
277a	Screw	1

Control box, upper part

Description	Kit No
HMI 100 / 101 (Blind 1 ph)	*98334762*
HMI 100 / 101 (Blind 3 ph)	*98334763*
HMI 200 / 201 (Standard 1 ph)	*98334764*
HMI 200 / 201 (Standard 3ph)	*98334765*
HMI 250 / 251 (HomeBooster 1 ph)	*98334766*
HMI 250 / 251 (HomeBooster 3 ph)	*98334767*
HMI 300 / 301 (Graphical 1 ph)	*98334768*
HMI 300 / 301 (Graphical 3 ph)	*98334769*

Content

Pos.	Description	Quantity
251b	Control box	1
251d	Screw	4

Cover for CIM

Pos.	Description	Kit No
287	Cover	*98330622*

Fan

Pos.	RPM	kW	Diameter	Kit No
152 156	1500 - 2000	all	88 [83)]	*98290123*
	2900 - 4000	≤1.1	88 [83)]	*98290123*
		>1.1	108 [83)]	*98290124*
	4000 - 5900	all	88 [83)]	*98290123*

83) Some custom-made motors are fitted with an oversize fan.
The table is according the standard range.

Fan cover

Pos.	Description	Kit No
151, 152	Cover for fan, with screw	*98330566*

MGE model H/I

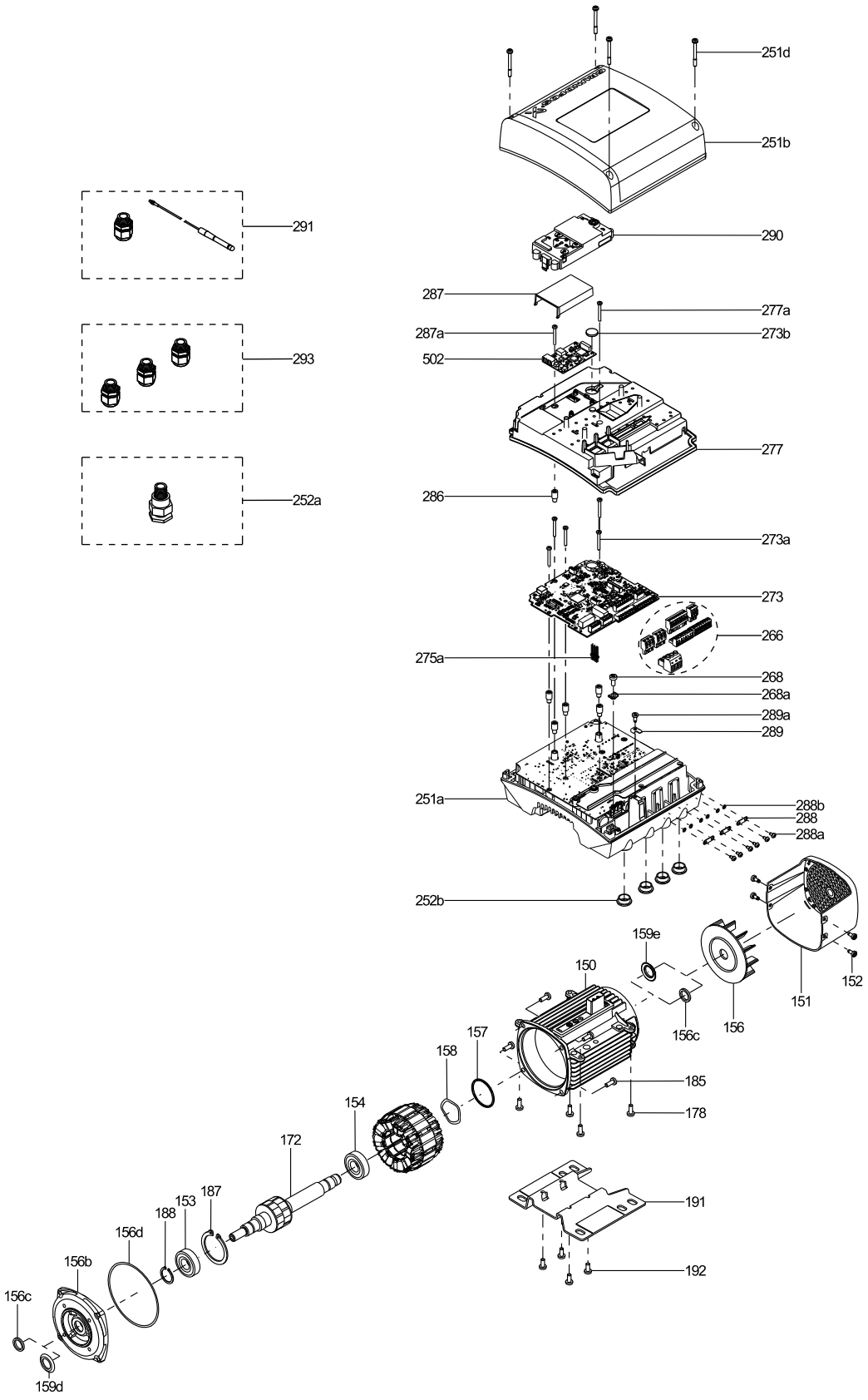
251d
251b
291
290
287
277a
287a
273b
502
293
277
252a
286
273a
273
266
275a
268
268a
289a
289
251a
288b
288
288a
252b
159e
150
152
151
156
156c
157
158
185
178
154
172
191
187
153
188
156d
156b
192
156c
159d
TM057026

Flange

Standard	Type	Description	Model	Kit No
IEC	B3	MGE71/80	End-shield	*98330550*
		MGE90	End-shield	*98330551*
	B5	MGE71	FF130	*98290129*
		MGE80	FF165	*98330547*
		MGE90	FF165	*98330548*
	B14 V18 B34	MGE71	FT85	*98290125*
		MGE80	FT100	*98290126*
		MGE80	FT100 / 6304 bearing	*98290127*
		MGE90	FT115	*98290128*
NEMA	56C	MLE71/80	-	*98330554*
		MLE90	-	*98330555*
	182TC	MLE90	-	*98330556*
CME	CMS1D	MGE71/80	Discharge S 1" Rp	*98330558*
	CMS1C	MGE71/80	Discharge S 1" NPT	*98330564*
	CMS1B	MGE71/80	Small	*98330559*
	CMS2A	MGE90	Small	*98330561*
	CML1A	MGE71/80	Large	*98330562*
	CML2A	MGE90	Large	*98330563*

Content

Pos.	Description	Quantity
156b	Flange	1
156d	Gasket	1
185	Screw	4
188	Locking ring (only on NEMA & IEC MGE90)	1

Functional module

Description	Kit No
FM100 (Basic)	*98334775*
FM200 (Standard)	*98334776*
FM300 (Advanced)	*98334777*

Content

Pos.	Description	Quantity
273	Functional module	1
273a	Screw	5
275a	Pin header	1
286	Spacer	1

Foot plate

Pos.	Colour	Size	Kit No
191, 192	Black	71	*98330597*
		80	*98330598*
		71, 80, 90 NEMA 56C	*98330600*
		90	*98330599*

Foot plate, CM(E) pump

Pos.	Colour	Size		Kit No
191, 192	Black	SmCM	≤1.1 kW	*98330601*
		SmCM	> 1.1 kW	*98330599*
		LaCM	≤1.1 kW	*98330602*
		LaCM	> 1.1 kW	*98374278*
	Grey	SmCM	≤1.1 kW	*98430950*
		SmCM	> 1.1 kW	*98430951*
		LaCM	≤1.1 kW	*98430954*
		LaCM	> 1.1 kW	*98430955*

Isolation cover for power board

Description	Kit No
1 Single-phase	*98330624*
3 Three-phase	*98330625*

Content

Pos.	Description	Quantity
277	Isolation cover	1
277a	Screw	1

HMI - control panel

Pos.	Description		Kit No
290	HMI 300	(Graphical with radio)	*98334770*
	HMI 301	(Graphical without radio)	*98365944*
	HMI 100	(Blind with radio)	*98334772*
	HMI 200	(Standard with radio)	
	HMI 250	(Homebooster with radio)	
	HMI 101	(Blind without radio)	*98365945*
	HMI 201	(Standard without radio)	
	HMI 251	(Homebooster without radio)	

Screws including wire clamps and PE washer

Pos.	Description / Kit No	*98330627*
268	Wire clamp	1
268a	Screw	1
288	Wire clamp	3
288a	Screw	6
288b	Washer	6
289	Base for earth screw	1
289a	Screw	1

Seal (gamma ring)

Pos.	Description	Kit No
159d 159e	MGE71/80, MLE71/80	*98334779*
	MGE90	*98334780*
	MLE90	*98334781*

MGE model H/I

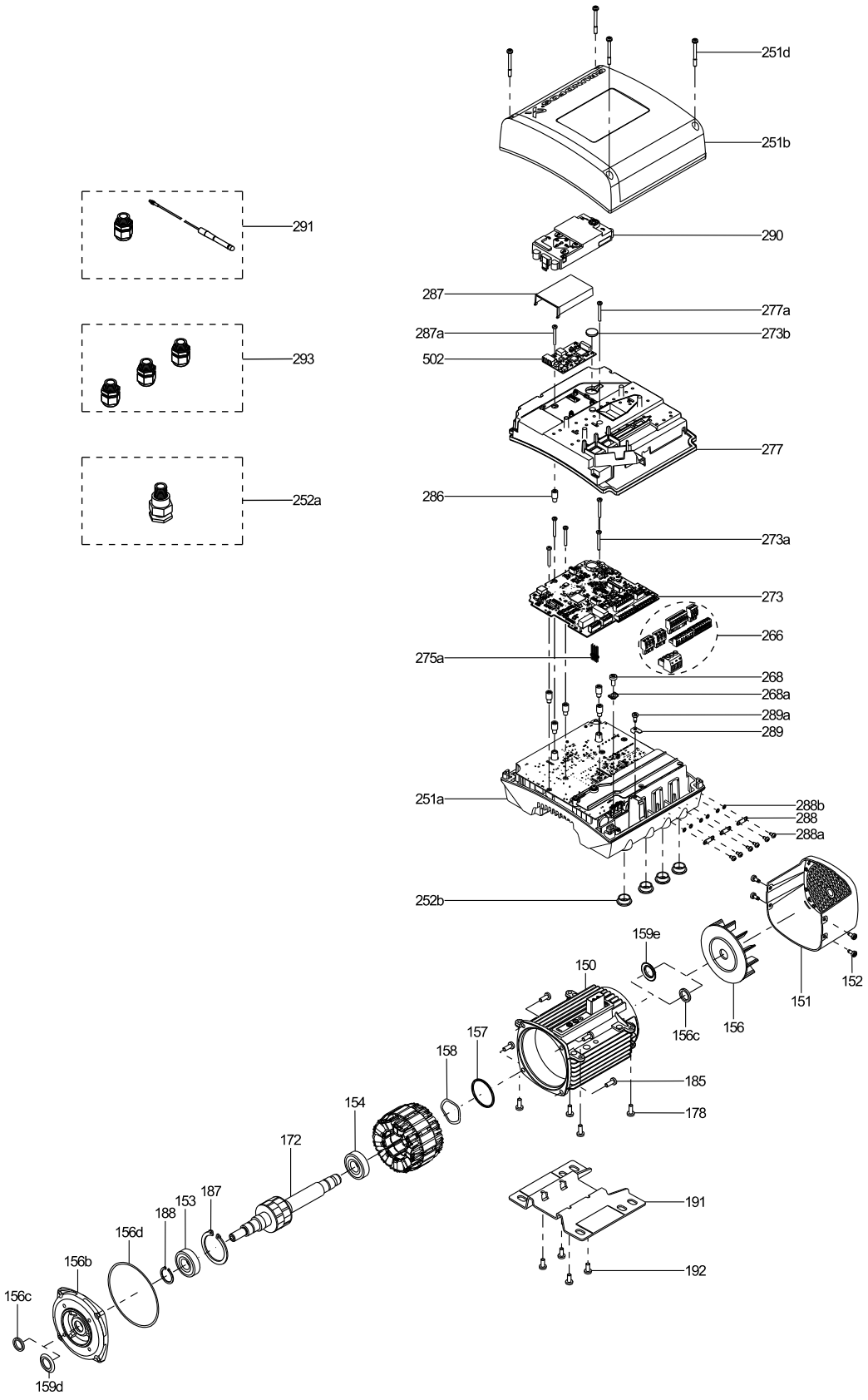
251d
251b
291
290
287
277a
287a
273b
502
293
277
252a
286
273a
273
266
275a
268
268a
289a
289
251a
288b
288
288a
252b
159e
150
152
151
156
156c
157
158
185
178
154
172
191
187
153
188
156d
156b
192
156c
159d
TM057026

Replacement motor (without control box, frequency converter and foot)

IEC, 1-phase 230 V, frame size 71

Power [kW]	Mounting designation	Max. speed	Shaft	Length of stator	Class	Kit No
0.37	B3	-4	Keyway	A	IP55	98293691
					IP66	98293913
				B	IP66	98444540
			Smooth	A	IP55	98293689
					IP66	98293911
				B	IP66	98444538
	B5	-4	Keyway	A	IP55	98293711
					IP66	98293933
				B	IP66	98444546
			Smooth	A	IP55	98293710
					IP66	98293932
				B	IP66	98444545
	B14	-4	Keyway	A	IP55	98293690
					IP66	98293912
				B	IP66	98444539
			Smooth	A	IP55	98293688
					IP66	98293910
				B	IP66	98444537
0.55	B3	-2	Keyway	A	IP55	98293687
					IP66	98293909
			Smooth	A	IP55	98293685
					IP66	98293907
		-1	Keyway	A	IP55	98293695
					IP66	98293917
			Smooth	A	IP55	98293693
					IP66	98293915
	B5	-2	Keyway	A	IP55	98293709
					IP66	98293931
			Smooth	A	IP55	98293708
					IP66	98293930
		-1	Keyway	A	IP55	98293713
					IP66	98293935
			Smooth	A	IP55	98293712
					IP66	98293934
	B14	-2	Keyway	A	IP55	98293686
					IP66	98293908
			Smooth	A	IP55	98293684
					IP66	98293906
		-1	Keyway	A	IP55	98293694
					IP66	98293916
			Smooth	A	IP55	98293692
					IP66	98293914

IEC, 1-phase 230 V, frame size 80

Power [kW]	Mounting designation	Max. speed	Shaft	Length of stator	Class	Kit No
0.55	B3	-4	Keyway	B	IP55	98293757
					IP66	98293979
			Smooth	B	IP55	98293755
					IP66	98293977
	B5	-4	keyway	B	IP55	98293792
					IP66	98294014
			Smooth	B	IP55	98293791
					IP66	98294013
	B14	-4	Keyway	B	IP55	98293756
					IP66	98293978
			Smooth	B	IP55	98293754
					IP66	98293976
0.75	B3	-4	Keyway	C	IP55	98293761
					IP66	98293983
			Smooth	C	IP55	98293759
					IP66	98293981
		-2	Keyway	A	IP55	98293747
					IP66	98293969
			Smooth	A	IP55	98293745
					IP66	98293967
	B5	-4	Keyway	C	IP55	98293794
					IP66	98294016
			Smooth	C	IP55	98293793
					IP66	98294015
		-2	Keyway	A	IP55	98293786
					IP66	98294008
			Smooth	A	IP55	98293785
					IP66	98294007
	B14	-4	Keyway	C	IP55	98293760
					IP66	98293982
			Smooth	C	IP55	98293758
					IP66	98293980
		-2	Keyway	A	IP55	98293746
					IP66	98293968
			Smooth	A	IP55	98293744
					IP66	98293966
				A	IP55	98293720[8] [4]
					IP66	98293942[8] [4]

Power [kW]	Mounting designation	Max. speed	Shaft	Length of stator	Class	Kit No
1.1	B3	-2	Keyway	B	IP55	*98293752*
					IP66	*98293974*
			Smooth	B	IP55	*98293750*
					IP66	*98293972*
		-1	Keyway	A	IP55	*98293733*
					IP66	*98293955*
			Smooth	A	IP55	*98293725*
					IP66	*98293947*
	B5	-2	Keyway	B	IP55	*98293790*
					IP66	*98294012*
			Smooth	B	IP55	*98293789*
					IP66	*98294011*
		-1	Keyway	A	IP55	*98293788*
					IP66	*98294010*
			Smooth	A	IP55	*98293787*
					IP66	*98294009*
	B14	-2	Keyway	B	IP55	*98293751*
					IP66	*98293973*
			Smooth	B	IP55	*98293749*
					IP66	*98293971*
					IP55	*98293753*[8] 4)
					IP66	*98293975*[8] 4)
		-1	Keyway	A	IP55	*98360068*
					IP66	*98360070*
			Smooth	A	IP55	*98360067*
					IP66	*98360069*
					IP55	*98293748*[8] 4)
					IP66	*98293970*[8] 4)

84) With oversize bearing

IEC, 1-phase 230 V, frame size 90

Power [kW]	Mounting designation	Max. speed	Shaft	Length of stator	Class	Kit No
1.5	B3	-2	Keyway	C	IP55	*98293846*
					IP66	*98294068*
			Smooth	C	IP55	*98293843*
					IP66	*98294065*
		-1	Keyway	B	IP55	*98293840*
					IP66	*98294062*
			Smooth	B	IP55	*98293837*
					IP66	*98294059*
	B5	-2	Keyway	C	IP55	*98293845*
					IP66	*98294067*
			Smooth	C	IP55	*98293842*
					IP66	*98294064*
		-1	Keyway	B	IP55	*98293839*
					IP66	*98294061*
			Smooth	B	IP55	*98293836*
					IP66	*98294058*
	B14	-2	Keyway	C	IP55	*98293844*
					IP66	*98294066*
			Smooth	C	IP55	*98293841*
					IP66	*98294063*
		-1	Keyway	B	IP55	*98293838*
					IP66	*98294060*
			Smooth	B	IP55	*98293835*
					IP66	*98294057*

IEC, 3-phase 430 V, frame size 71

Power [kW]	Mounting designation	Max. speed	Shaft	Length of stator	Class	Kit No
0.37	B3	-4	Keyway	A	IP55	98293703
					IP66	98293925
				B	IP66	98444544
			Smooth	A	IP55	98293701
					IP66	98293923
				B	IP66	98444542
	B5		Keyway	A	IP55	98293717
					IP66	98293939
				B	IP66	98444548
			Smooth	A	IP55	98293716
					IP66	98293938
				B	IP66	98444547
	B14		Keyway	A	IP55	98293702
					IP66	98293924
				B	IP66	98444543
			Smooth	A	IP55	98293700
					IP66	98293922
				B	IP66	98444541
0.55	B3	-2	Keyway	A	IP55	98293699
					IP66	98293921
			Smooth	A	IP55	98293697
					IP66	98293919
		-1	Keyway	A	IP55	98293707
					IP66	98293929
			Smooth	A	IP55	98293705
					IP66	98293927
	B5	-2	Keyway	A	IP55	98293715
					IP66	98293937
			Smooth	A	IP55	98293714
					IP66	98293936
		-1	Keyway	A	IP55	98293719
					IP66	98293941
			Smooth	A	IP55	98293718
					IP66	98293940
	B14	-2	Keyway	A	IP55	98293698
					IP66	98293920
			Smooth	A	IP55	98293696
					IP66	98293918
		-1	Keyway	A	IP55	98293706
					IP66	98293928
			Smooth	A	IP55	98293704
					IP66	98293926

IEC, 3-phase 430 V, frame size 80

Power [kW]	Mounting designation	Max. speed	Shaft	Length of stator	Class	Kit No
0.55	B3	-4	Keyway	B	IP55	98293780
					IP66	98294002
			Smooth	B	IP55	98293778
					IP66	98294000
	B5	-4	keyway	B	IP55	98293802
					IP66	98294024
			Smooth	B	IP55	98293801
					IP66	98294023
	B14	-4	Keyway	B	IP55	98293779
					IP66	98294001
			Smooth	B	IP55	98293777
					IP66	98293999
0.75	B3	-4	Keyway	C	IP55	98293784
					IP66	98294006
			Smooth	C	IP55	98293782
					IP66	98294004
		-2	Keyway	A	IP55	98293765
					IP66	98293987
			Smooth	A	IP55	98293763
					IP66	98293985
	B5	-4	Keyway	C	IP55	98293804
					IP66	98294026
			Smooth	C	IP55	98293803
					IP66	98294025
		-2	Keyway	A	IP55	98293796
					IP66	98294018
			Smooth	A	IP55	98293795
					IP66	98294017
	B14	-4	Keyway	C	IP55	98293783
					IP66	98294005
			Smooth	C	IP55	98293781
					IP66	98294003
		-2	Keyway	A	IP55	98293764
					IP66	98293986
			Smooth	A	IP55	98293762
					IP66	98293984
					IP55	98293766[8] 5)
					IP66	98293988[8] 5)

Power [kW]	Mounting designation	Max. speed	Shaft	Length of stator	Class	Kit No
1.1	B3	-2	Keyway	B	IP55	98293775
					IP66	98293997
			Smooth	B	IP55	98293773
					IP66	98293995
		-1	Keyway	A	IP55	98293770
					IP66	98293992
			Smooth	A	IP55	98293768
					IP66	98293990
	B5	-2	keyway	B	IP55	98293800
					IP66	98294022
			Smooth	B	IP55	98293799
					IP66	98294021
		-1	Smooth	A	IP55	98293797
					IP66	98294019
			Keyway	A	IP55	98293798
					IP66	98294020
	B14	-2	Keyway	B	IP55	98293774
					IP66	98293996
			Smooth	B	IP55	98293772
					IP66	98293994
					IP55	98293776[8] 5)
					IP66	98293998[8] 5)
		-1	Keyway	A	IP55	98293769
					IP66	98293991
			Smooth	A	IP55	98293767
					IP66	98293989
					IP55	98293771[8] 5)
					IP66	98293993[8] 5)

85) With oversize bearing

IEC, 1-phase 430 V, frame size 90

Power [kW]	Mounting designation	Max. speed	Shaft	Length of stator	Class	Kit No
1.1	B3	-4	Keyway	D	IP55	98293876
					IP66	98294098
			Smooth	D	IP55	98293873
					IP66	98294095
	B5		Keyway	D	IP55	98293875
					IP66	98294097
			Smooth	D	IP55	98293872
					IP66	98294094
	B14		Keyway	D	IP55	98293874
					IP66	98294096
			Smooth	D	IP55	98293871
					IP66	98294093

Power [kW]	Mounting designation	Max. speed	Shaft	Length of stator	Class	Kit No
1.5	B3	-2	Keyway	C	IP55	98293858
					IP66	98294080
			Smooth	C	IP55	98293855
					IP66	98294077
		-1	Keyway	B	IP55	98293852
					IP66	98294074
			Smooth	B	IP55	98293849
					IP66	98294071
	B5	-2	Keyway	C	IP55	98293857
					IP66	98294079
			Smooth	C	IP55	98293854
					IP66	98294076
		-1	Keyway	B	IP55	98293851
					IP66	98294073
			Smooth	B	IP55	98293848
					IP66	98294070
	B14	-2	Keyway	C	IP55	98293856
					IP66	98294078
			Smooth	C	IP55	98293853
					IP66	98294075
		-1	Keyway	B	IP55	98293850
					IP66	98294072
			Smooth	B	IP55	98293847
					IP66	98294069
2.2	B3	-2	Keyway	D	IP55	98293870
					IP66	98294092
			Smooth	D	IP55	98293867
					IP66	98294089
		-1	Keyway	C	IP55	98293864
					IP66	98294086
			Smooth	C	IP55	98293861
					IP66	98294083
	B5	-2	Keyway	D	IP55	98293869
					IP66	98294091
			Smooth	D	IP55	98293866
					IP66	98294088
		-1	Keyway	C	IP55	98293863
					IP66	98294085
			Smooth	C	IP55	98293860
					IP66	98294082
	B14	-2	Keyway	D	IP55	98293868
					IP66	98294090
			Smooth	D	IP55	98293865
					IP66	98294087
		-1	Keyway	C	IP55	98293862
					IP66	98294084
			Smooth	C	IP55	98293859
					IP66	98294081

NEMA, 1-phase 240 V, frame size 71

Mounting designation	Power [hp]	Max. speed	Shaft	Length of stator	Class	Kit No
56 C	0.5	-4	Keyway	A	IP55	*98293724*
					IP66	*98293946*
			Smooth	A	IP55	*98293723*
					IP66	*98293945*

NEMA, 1-phase 240 V, frame size 80

Mounting designation	Power [hp]	Max. speed	Shaft	Length of stator	Class	Kit No
56 C	1	-4	Keyway	C	IP55	*98293811*
					IP66	*98294033*
			Smooth	C	IP55	*98293810*
					IP66	*98294032*
		-2	Keyway	A	IP55	*98293721*
					IP66	*98293943*
			Smooth	A	IP55	*98293722*
					IP66	*98293944*
	0.75	-4	Keyway	B	IP55	*98293809*
					IP66	*98294031*
			Smooth	B	IP55	*98293808*
					IP66	*98294030*
		-2	Keyway	B	IP55	*98293806*
					IP66	*98294028*
			Smooth	B	IP55	*98293807*
					IP66	*98294029*
	1.5	-1	Keyway	A	IP55	*98293726*
					IP66	*98293948*
			Smooth	A	IP55	*98293727*
					IP66	*98293949*
	2	-2	Keyway	C	IP55	*98293881*
					IP66	*98294102*
			Smooth	C	IP55	*98293880*
					IP66	*98294101*
		-1	Keyway	B	IP55	*98293879*
					IP66	*98294100*
			Smooth	B	IP55	*98293878*
					IP66	*98294099*

NEMA, 3-phase 460V, frame size 71

Mounting designation	Power [hp]	Max. speed	Shaft	Length of stator	Class	Kit No
56 C	0.5	-4	Keyway	A	IP55	*98293732*
					IP66	*98293954*
			Smooth	A	IP55	*98293731*
					IP66	*98293953*
	0.75		Keyway	B	IP55	*98293816*
					IP66	*98294038*
			Smooth	B	IP55	*98293815*
					IP66	*98294037*
	1	-4	Keyway	C	IP55	*98293818*
					IP66	*98294040*
			Smooth	C	IP55	*98293817*
					IP66	*98294039*
		-2	Keyway	A	IP55	*98293729*
					IP66	*98293951*
			Smooth	A	IP55	*98293730*
					IP66	*98293952*
	1.5	-4	Keyway	D	IP55	*98293891*
					IP66	*98294112*
			Smooth	D	IP55	*98293890*
					IP66	*98294111*
		-2	Keyway	B	IP55	*98293813*
					IP66	*98294035*
			Smooth	B	IP55	*98293814*
					IP66	*98294036*
		-1	Keyway	A	IP55	*98293734*
					IP66	*98293956*
			Smooth	A	IP55	*98293735*
					IP66	*98293957*
	2	-2	Keyway	C	IP55	*98293885*
					IP66	*98294106*
			Smooth	C	IP55	*98293884*
					IP66	*98294105*
		-1	Keyway	B	IP55	*98293883*
					IP66	*98294104*
			Smooth	B	IP55	*98293882*
					IP66	*98294103*
	3	-2	Keyway	D	IP55	*98293889*
					IP66	*98294110*
			Smooth	D	IP55	*98293888*
					IP66	*98294109*
		-1	Keyway	C	IP55	*98293887*
					IP66	*98294108*
			Smooth		IP55	*98293886*
					IP66	*98294107*
182 TC	1.5	-4	Keyway	D	IP55	*98293895*
					IP66	*98294117*
			Smooth	D	IP55	*98293894*
					IP66	*98294115*
	3	-2	Keyway	D	IP55	*98293893*
					IP66	*98294114*
			Smooth	D	IP55	*98293892*
					IP66	*98294113*