Direct Level Control

By Application manager Søren Mortensen, Grundfos, Denmark

Introduction:

Boiler feed systems rely on sensors to control the pump operations. A number of different techniques are available to do this, each of them having a variety of relative advantages and disadvantages.

Choosing the correct method of controlling levels in boiler systems is an important step towards economic efficiency of operations.

Purpose:

The purpose of this white paper is to discuss the various options available for level control in boiler systems.

Table of content

Objective: to maintain constant level in the steam boiler with minimum CAPEX and OPEX.

Obtaining lowest CAPEX does not mean installing the cheapest components available, but reducing the number of necessary components instead. Installing iSOLUTIONS makes some components and piping redundant as the pump now can take care of the controls instead of relying on valves.

Obtaining lowest OPEX requires optimum control and system design as well as efficient pumps. Flow restricting valves, by-passes and mixing loops must be reduced to a minimum as these are the main contributor to high energy consumption and maintenance costs.

Boiler feed with variable speed pumps and direct level control.

Function

1. Water level is constant.
2. The water level in the boiler is controlled directly by means of the variable speed pumps without the use of a feed valve.
3. The pumps are controlled by means of the 4-20mA level sensor positioned on the boiler. This way the water intake is continuously adjusted according to steam consumption.
4. The pumps are running full speed at low level and decrease speed as the level increases and eventually will stop at maximum level. For this reason, by-pass is not necessary.

This system operates smoothly and is ideal for all types of steam boilers, both small and large, and will minimise the risk of over-boiling and carry-over.

Benefits

> Constant water level secures high steam quality.
> Reduced CAPEX:
  > By-pass and control valve is redundant.
  > Smaller pumps due to the fact they do not have to overcome the pressure loss across the control valve.
> Reduced OPEX:
  > Reduced maintenance costs as the system now is without control valve.
  > Removal of the control valve and by-pass leads to reduced energy expenses.
> Operational benefits:
  > Very quick reaction time. The pump goes from 0 – 100 % flow and down again 10 times faster than the control valve.

Drawbacks

> Requires precise and qualified start-up. Pumps might cavitate at cold boiler start up.

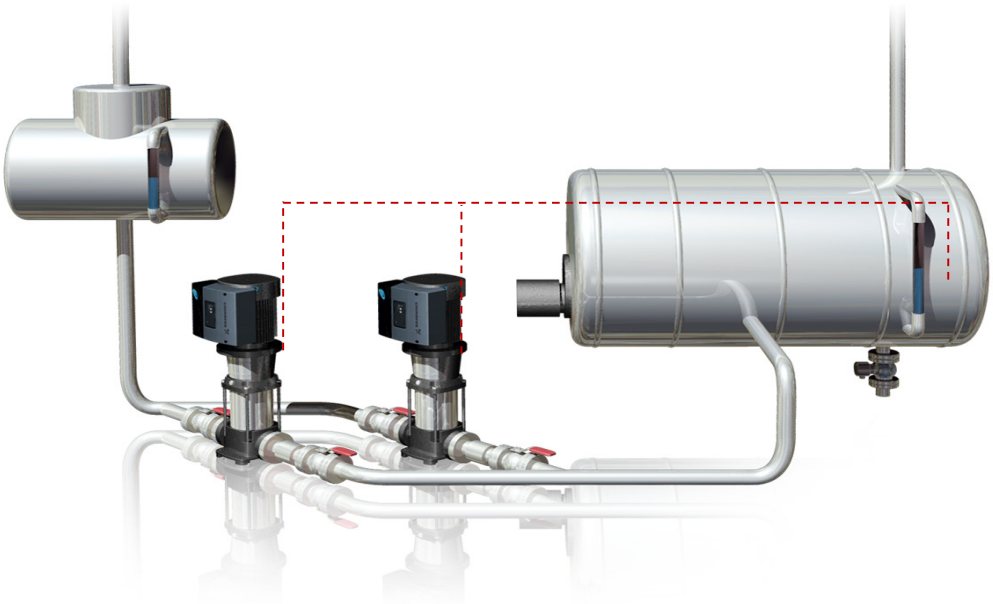

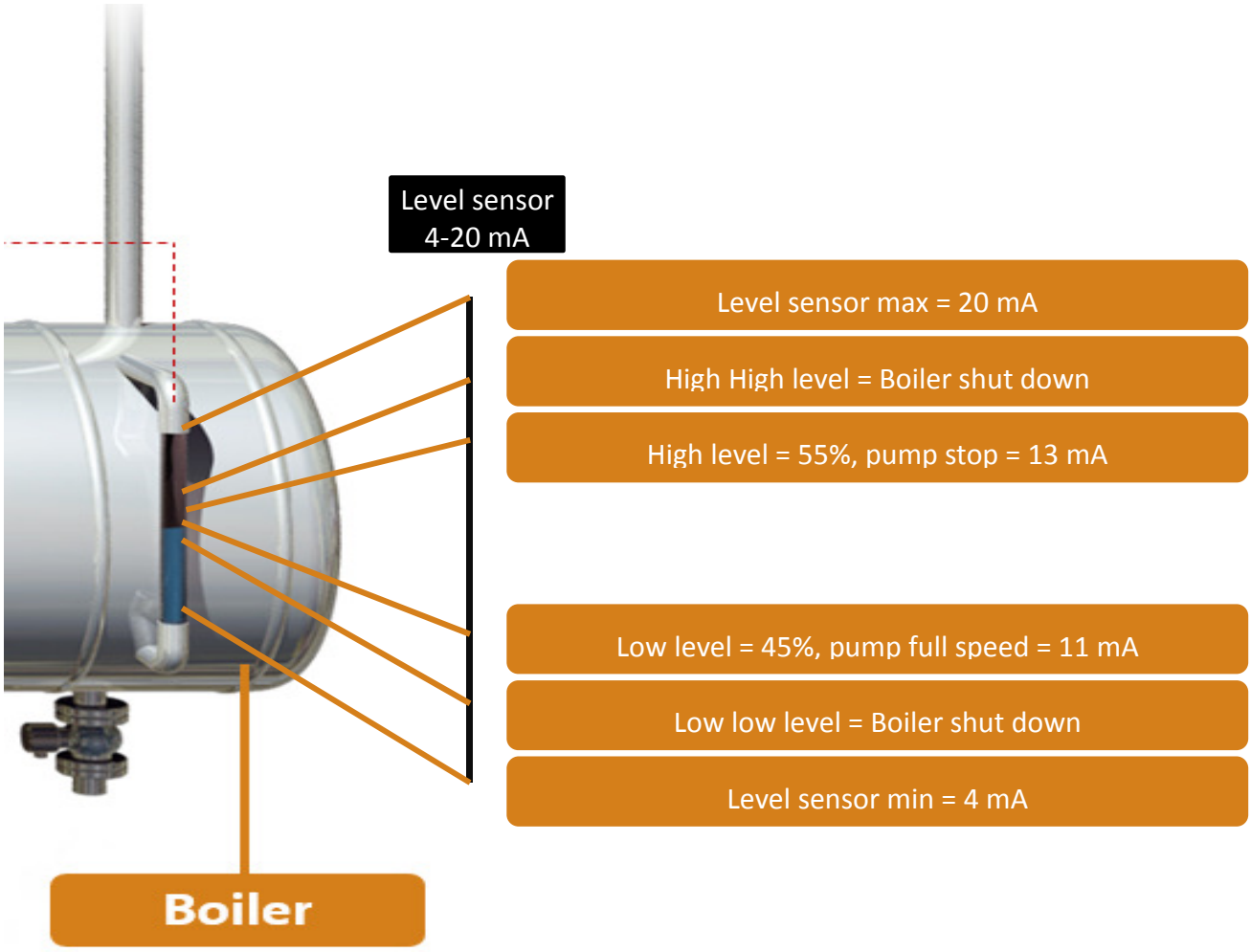
Level sensor
4-20 mA
Level sensor max = 20 mA
High High level = Boiler shut down
High level = 55%, pump stop = 13 mA
Low level = 45%, pump full speed = 11 mA
Low low level = Boiler shut down
Level sensor min = 4 mA
Boiler

Boiler feed via feed valve with variable speed pumps

Function

1. Water level is constant.
2. The water level in the boiler is controlled by means of a feed valve, which is controlled by a level sensor positioned on the boiler.
3. The feed valve controls the water intake, which continuously adjusts according to steam consumption. This, however, requires that the feed pump be set to “continuous operation”.
4. The pumps are operating at variable speed and the resulting pump pressure is maintained constant independent on the opening of the control valve and by that the flow.

This system operates smoothly and works on most types of steam boilers, both small and large, and will minimise the risk of over-boiling.

Benefits

> Constant water level secures high steam quality.

Drawbacks

> Increased CAPEX
> Solution requires a control valve and a by-pass.
> The pumps must be sized to overcome the pressure drop across the control valve.
> Increased OPEX
> Higher Energy consumption as the pump requires more motor power to supply extra flow in the by-pass and the higher pressure related to pressure drop across control valve.
> Yearly service and maintenance of the control valve which naturally costs money.

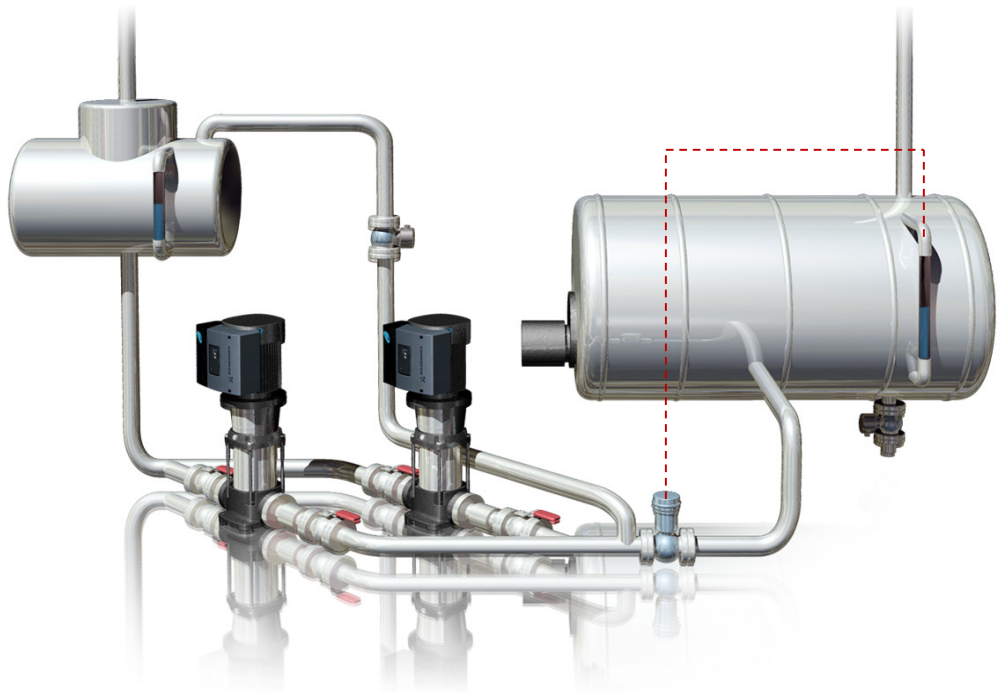

Boiler feed via feed valve w. constant speed pumps

Function

1. Water level is constant.
2. The water level in the boiler is controlled by means of a feed valve, which is controlled by a signals from a level sensor positioned on the boiler.
3. The feed valve controls the water intake, which continuously adjusts according to steam consumption. This, however, requires that the feed pump be set to “continuous operation”.
4. The pumps are running at constant speed and the resulting pump pressure will vary depending on the opening of the control valve and the resulting flow.

This system operates smoothly and works on most types of steam boilers, both small and large, and will minimise the risk of over-boiling.

Benefits

> Constant water level ensures high steam quality.

Drawbacks

> Increased CAPEX
> The solution requires a control valve and a by-pass loop.
> The pumps must be sized to overcome the pressure drop across the control valve that naturally requires bigger pumps.
> Increased OPEX
> Higher Energy consumption as the pump requires more motor power to supply extra flow in the by-pass and a higher pressure.
> Yearly service and maintenance of the control valve which naturally costs money.
> Requires precise and qualified start-up. Pump cavitation might occur on cold boiler start up.

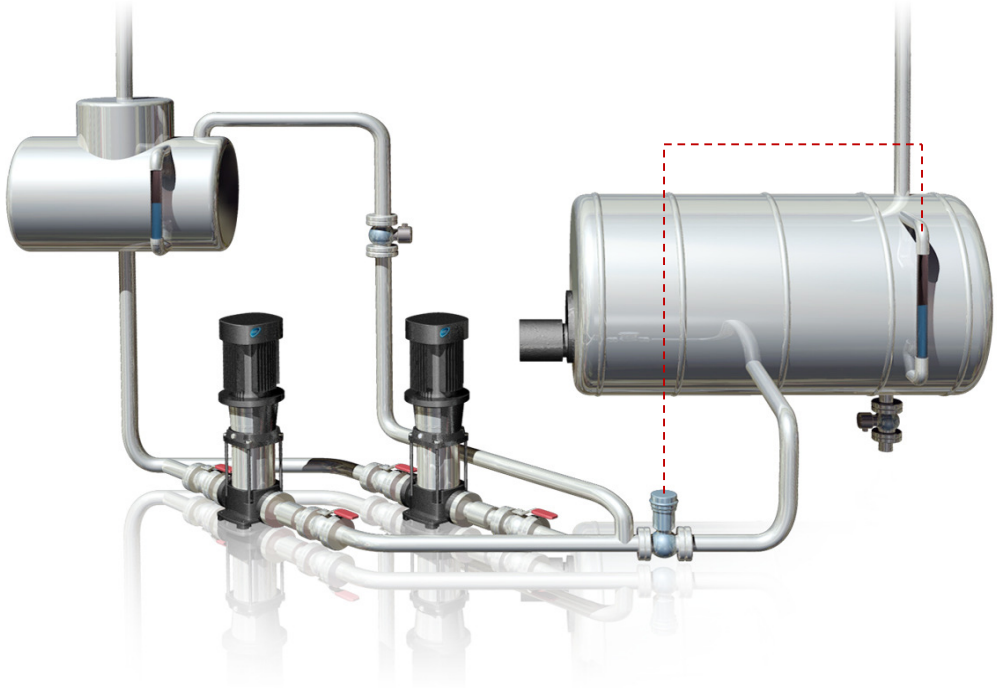

Boiler feed with constant speed and on/off control

Function

1. Water level fluctuates between low and high level.
2. The water level in the boiler is controlled by means of two level switches placed on the boiler.
3. The pumps are running at constant speed.

When feed water enters the boiler, it enters between the heat-transfer surface and the surface of the boiling water. Even though the feed water is pre-heated, it is still necessarily colder than the water in the boiler and creates a cold layer within the boiler water. As steam bubbles rise from the heat-transfer surface through this cold layer, they cool and some of the steam in the bubbles will condense. This causes two serious problems.

First, the steam bubbles leaving the surface of the water and entering the steam system will contain a mist of water. When a large amount of feed water enters the boiler, the steam space above the water level becomes foggy. This fog and the resultant water-contaminated, low-quality steam continues until the water in the boiler becomes reasonably isothermal.

The second problem is the suppression of the rate of steam production. The addition of a large amount of cooler water slows steam production until the water reaches saturation temperature.

Benefits

> Simple and relatively uncomplicated to install.
> Low CAPEX
> Solution requires no intelligent control unit.

Drawbacks

> Steam quality is low. See above comment
> Pumps will cavitate at start-up
> Operating on/off requires multiple on/off per hour and because of high water temperature the pumps will cavitate at start-up due to the very quickly movement of water both in the pump and suction line.
> This quickly movement of the water can result in formation of steam bubbles in the water as pressure decreases rapidly. When these steam bubbles implode again, they will create a water hammer and might damage the pump.